III. *Description of the Great Melbourne Telescope.*

By T. R. Robinson, *D.D., F.R.S., &c., and* Thomas Grubb, *Esq., F.R.S., &c.*

Received June 11,—Read June 11, 1868.

In 1862 the authorities of the Colony of Victoria formed the design of adding to the Observatory, which they were then establishing at Melbourne, a powerful telescope which should be applied in reviewing the Nebulæ of the Southern Hemisphere. They applied through the Duke of Newcastle, then Foreign Secretary, to the President and Council of the Royal Society, for encouragement in this undertaking, and advice as to the best means of carrying it into execution. The subject was not new to that Body. They had been, conjointly with the British Association, engaged, though ineffectually, for several years in trying to induce the British Government to adopt a similar plan*. With this object they had appointed a Committee, including several of the brightest names of British Science†, to examine the subject thoroughly and recommend the plan which they considered most desirable to be adopted. Subsequent to their report, Mr. Lassell had actually constructed a 4-feet Newtonian, which he was using most successfully at Malta, M. L. Foucault, whose recent death all lament, had invented the silvered glass speculum which bears his name, and Mr. Warren De La Rue had changed Celestial Photography from a toy into a potent instrument of astronomical research. These new facts required new discussion, which was carefully made, but resulted in adopting the former report with little change.

In consequence the legislature of Victoria, acting on the recommendation of our President and Council, voted in 1865 the requisite sum; and Mr. Grubb undertook the construction of this gigantic equatorial, under the direction of a Committee consisting of the late Lord Rosse, Mr. Warren De La Rue, and myself. After Lord Rosse's death, his son, the present Earl, was nominated to succeed him by the President. The instrument has been very successfully completed; and we hope that a detailed account of its construction will be acceptable, both from the interest which belongs to the accomplishment of a great undertaking, and because, though the late Lord Rosse and Mr. Lassell have published their methods of making large specula, the subject is by no means exhausted, and anything which lessens the difficulties which still beset it, and makes the

---

* For some account of this see Reports of British Association, 1850, p. xvii; 1851, p. xxiv; 1853, p. xxv; and the printed correspondence of the Committee.

† It consisted of Lord Rosse and General Sabine, Presidents of the Royal Society and British Association, Lord Wrottesley, Sir D. Brewster, Sir J. Herschel, Sir J. Lubbock, the Dean of Ely (Peacock), Messrs. Adams, Airy, E. J. Cooper, Lassell, Nasmyth, Phillips, and myself. It is sad to think how many of these we have lost.

use of large reflectors more attainable, cannot but tend to the progress of some of the most interesting branches of astronomy.

Before entering on this description, it may be well to make some remarks on the most important recommendations of the Committee, which may be found in the printed "Melbourne Telescope Correspondence."

I. The Committee recommend a 4-feet reflector. No doubt a 6-feet would be preferable; but it would be five times as expensive, and the execution of it thrice as difficult: on the other hand, two of them were familiar with what Lord Rosse's 3-feet performed, and were thus able to say with confidence that an instrument of nearly twice its power would be amply sufficient for the work proposed. Two of the Committee wished for a 5-feet, but some fears were entertained that it might be difficult to mount it on a thoroughly effective equatorial, and they decided on the safer course: it has, however, turned out that this caution was not necessary, for the actual mounting is strong enough to carry a 5-feet, should it ever be required.

II. They preferred the reflector to the achromatic; and with good reason. It is not probable that an achromatic can ever be made which shall have as much light as a 4-feet reflector; and if it could, the cost of it would be tremendous. The late M. Merz, when consulted by one of the Committee about a 30-inch achromatic, expressed much doubt as to the possibility of making one; but added that if it were practicable, the cost of the object-glass alone would be from £8500 to £9000, and that the equatorial complete would not be less than £20,000. What would the equivalent of a 4-feet cost? Erroneous, I may even say absurd opinions are often expressed as to the relative power of these two sorts of telescopes. Thus Fraunhofer says specula reflect "an exceedingly small quantity of light." Even the elder Struve seems to think that the Dorpat achromatic, 9·58 inches diameter, "may rank with the most celebrated of all reflectors, namely, Herschel's." He cannot mean the "most celebrated one," that known as the 40-feet; but if we even suppose him to speak of the 18-inch front view, the statement is preposterous*. A speculum reflects 0·64 of the incident light after being many years in use, and even the Newtonian with its double reflection gives 0·401, allowing for that intercepted by the small speculum. And the achromatic does not by any means transmit all the light that falls on it. Light is lost in it from two causes: first, from the reflection at the four surfaces of the lenses. This can be calculated *accurately* from Fresnel's formula, which gives that for two surfaces of crown ($\mu=1{\cdot}521$) the transmitted light $\varrho^2=0{\cdot}9164$; for two of flint ($\mu=1{\cdot}662$) $\varrho'^2=0{\cdot}8842$; and for the four $\varrho^2 . \varrho'^2=0{\cdot}8122$†. Hence it is easily inferred that even if its glasses were perfectly transparent, the aperture of an achromatic would be to that of its equivalent Newtonian as $1:1{\cdot}42$; or in other words, one equivalent to the 4-feet Newtonian cannot be less than 33·73 inches. But it must be much more; for, secondly, all glass absorbs a portion of the light which passes

---

* See on this Herschel and South, Quarterly Journal of Science, vol. xx. pp. 286, 293.

† The loss must be more than this; for except at the very centre of the object-glass the incidence is a little oblique.

through it. The law of this transmission is

$$\mathrm{I}=e^{-nt},$$

I being the intensity of the emergent light, t the thickness of the medium, and n a constant depending on the nature of the medium and the colour of the light. In optical glass it may be supposed the same for each ray. The form of the equation shows that the intensity diminishes very rapidly as the thickness increases; and since this last is as the diameter of the object-glass, we shall soon come to a size which will not have more light than a Newtonian of equal aperture. This size could be easily determined if we knew n; but I have found no information on the subject except what I have got from some measures made by the late Lord ROSSE and Mr. GRUBB, several years ago, for a different purpose. Lord ROSSE'S specimen was a reflecting prism of English crown; Mr. GRUBB'S were two London plate, one French plate; and the fourth he described as a reflecting prism, but with no note of the quality of its glass. I assume it to have been crown, as flint of such size was then rare in England. The intensity of the transmitted light was measured by BUNSEN'S photometer, and the loss by reflection is computed, assuming μ to be that given above for crown. The expression of n is

$$n=\frac{\log \varrho^2-\log \mathrm{I}}{t\times \text{modulus}}.$$

The data are—

1. Lord ROSSE	$\mathrm{I}=0\cdot746$;	$t=1''\cdot125$;	hence $n=0\cdot1829$
2. French	$0\cdot805$;	$0\cdot750$;	$0\cdot1728$
3. London	$0\cdot860$;	$0\cdot300$;	$0\cdot2142$
4. London	$0\cdot770$;	$0\cdot600$;	$0\cdot1446$
5. Reflecting prism	$0\cdot810$;	$2\cdot000$;	$0\cdot0617$
			$0\cdot1552$

This last is undoubtedly too small; and possibly some false light was present in the experiment. I, however, retain it not to overstate my case. The error in I should not exceed $\frac{1}{60}$ of the whole: ϱ^2 is in some degree doubtful, from μ not having been specially determined for each specimen. All but the last, however, are known to be very near what I have assumed, and the error of ϱ^2 is but $\frac{1}{4}$ of that of the assumed μ. We will take 0·15 for n. As to the t of an achromatic, it will be sufficient in this discussion to take its mean thickness. For this Mr. GRUBB measured for me the mean thickness of a fine 12-inch object-glass of 18 feet focus, which he made some years ago. It is 1·75 inch, whence that of a similar lens of aperture A is $\frac{\mathrm{A}\times 1\cdot75}{12}$, and the expression of its intensity

$$\mathrm{I}=\log^{-1}(9\cdot90964)\times e^{-\mathrm{A}\times\log-1(8\cdot33995)}.$$

If in this we put A=33·73 inches, we find that I will be only 0·3883, and that such an object-glass, instead of being equiluminous with the 4-feet reflector, will be equal to one of 37¼ inches. For an achromatic of 48 inches, if such a one could be made, I would be only 0·2842, and therefore even this would not equal the reflector. These conclusions may seem startling to many; but they can only be avoided by supposing an error in n very much greater than can be admitted. It is, however, my purpose, in cooperation with Mr. GRUBB, to institute a series of experiments on the subject which will set the question at rest*.

If we seek any comparison of the light of the two kinds of telescope based on actual measures, little is to be found but vague conjectures. Thus:—1st. M. OTTO STRUVE *thinks* that Mr. LASSELL'S 2-feet Newtonian "is nearly equal in light to the Pulkova 16-inch object-glass:" this seems to refer to stars only. 2nd. I have examined faint objects with Mr. COOPER'S achromatic of 13·6, and with Sir J. HERSCHEL'S front view of 18, and have no doubt of the superiority of the latter: the ratio here is 1·32. 3rd. 72 circular inches of the central part of the Armagh Cassegrain showed the fifth star of Orion's trapezium as well as a good Cauchoix object-glass of 6·5 inch; this gives 1·31 for the ratio. The only two definite measures which I know are; 4th. Mr. POTTER found that a 4-inch object-glass by DOLLOND transmitted only 0·66 of the incident light†. Lastly, AMICI ascertained that an object-glass of 2·5 aperture was as bright as a Newtonian of $\frac{4}{3}$ the aperture; this would give 36 inches for the equivalent of the 4-feet reflector; but what has been already stated will show that it would be far short of this‡.

As to defining power, it is certain that specula can be finished to possess this in the highest degree, while their great angle of aperture with the absence of the secondary spectrum and of diffraction-rings adds greatly to their distinctness. The champions of the achromatic rely entirely on its power of showing small stars, which they assert are not visible in the reflector. This, however, is not proved; for it is no proof that because a star does not appear in the drawing of a nebula it was therefore invisible, the fact being that the observer's attention was directed to a different object. The effect of this is shown, among other examples, by the fifth star of the trapezium, and the dark ring of Saturn, which were long overlooked in telescopes which showed them easily when they were looked for. Besides, minute points of intrinsic brightness are brought out by high powers, but are quite invisible with the low ones which are used for nebulæ; but the case is very different with faint objects of sensible diameter. That any comparison may tell the truth, it should be made with the same power, at the same time (for many small stars are believed to be variable), and by the same eye. The only real advantage of the achromatic is that, from its smaller aperture, it is less disturbed by the air's unsteadiness. But long before it reached a size equivalent to the 4-feet this difference would disappear, and a part of it is removed by the arrangement described in the next section.

---

* The results of these are given in an Appendix.

† The focal length is not mentioned: I found that the old object-glass of the Armagh circle, 3·8 and 6·2-inch focus, transmitted only 0·60. It is a very good one, but the crown is rather strongly greenish. Many of the glasses of the elder DOLLOND have this tint.

‡ A 3-feet object-glass would have 54 feet focal length and would weigh about 5 cwt. As it could be supported only at the circumference, it would be difficult to prevent flexure in it.

III. The Committee recommended that the tube of the telescope should be of metal lattice-work, with a view to lessen the disturbing influence of currents in its interior. The speculum after sunset is in general warmer than the air which is in contact with it, and therefore heats it. It of course rises, and in an ordinary tube escapes along its upper side, while a cold stream descends along the lower side to replace the ascending one. The two form eddies at their common surface; and the result is a medium of irregular density very unfavourable to good vision. As the night advances the external air cools faster than the speculum, and the evil increases so as in extreme cases to destroy all sharp definition. In the proposed construction the warm air escapes through the openings almost as soon as it leaves the speculum, and the counter-current enters similarly, so that the disturbance is very much diminished. This plan was proposed by Sir J. HERSCHEL in the Preface to his Cape Observations, but was neglected till revived in 1852. Lord ROSSE then applied it to his 3-feet, and Mr. LASSELL and Mr. DE LA RUE to their telescopes—in every case with marked advantage. It is also strong, light, gives very little hold to the wind, and from the arrangement of its framing is unfavourable to the propagation of tremors.

IV. It was decided that the great speculum should be of metal, not silvered glass. The Committee were unwilling to risk the success of the noble work entrusted to them by venturing on an experiment whose success on so large a scale was very uncertain. All the telescopes which have been made on this latter plan are, they believe, with one exception, of which little is known, not larger than 12 or 15 inches. When it is a question of 48 inches, several difficulties present themselves which at present cannot be solved. Such a speculum must be of considerable thickness to keep its shape; it would be no easy matter to manufacture so large a block of glass, which must be homogeneous in structure and well annealed; the latter to prevent its breaking in working; the first because otherwise it will expand unequally and change its figure. Nor is it known whether a silver film of uniform thickness (which according to FOUCAULT is essential) can be deposited over so large a surface. And there are two still more decided objections. Glass, though rather less than half the specific gravity of speculum metal, somehow seems more liable to abnormal flexure. One of these silvered specula, apparently of uniform thickness and consistence, has been found to give a good image with one diameter vertical and not with another; and they all require the utmost precaution in supporting them. This doubt has recently been confirmed; for one of the small specula of the Melbourne Telescope, which will be described hereafter, is glass 8 inches in diameter; yet even though so small it gave bad images while it was mounted as the metal ones were which acted perfectly, until its edge pressure was uniformly distributed. Secondly, there is not the great increase of light which was expected from the high reflective power of polished silver. By JAMIN'S experiments, solid silver reflects at perpendicular incidence 0·93 of red light and 0·87 of indigo, while speculum metal gives 0·69 and 0·60. But the silver film which is deposited on the glass is much inferior. Lord ROSSE, who expected considerable gain from using it as the small speculum of his

6-feet, found that it only gave 0·67. Part of this deficiency may arise from its molecular condition, but more arises from its being partly transparent to the more refrangible rays of the spectrum, which it transmits so freely that Foucault proposed and used this silvered glass as a shade in solar observations; for this reason also the images will be tinged with red. The silver film would tarnish faster than the speculum metal; and though on a small scale it is easily renewed, the manipulation of a speculum of such size, and probably of 5 cwt., would present considerable difficulty. Nor is it impossible that the film might break up under considerable changes of temperature, such as occur at Melbourne, or be spotted by rain or dew.

V. The last matter which requires explanation is the Committee's decision that the telescope should be of the Cassegrain construction. This was not made without considerable discussion; for very few have ever been made on this plan, and only two of the Committee had any practical acquaintance with them. Lord Rosse made one of 18 inches aperture; but the specula were not properly proportioned, and he used it but little. I had a good deal of experience with a 15-inch one, and was perfectly satisfied with its performance on such stars as ε Arietes, η Coronæ, and ζ Herculis when closest; but still the step from 15 to 48 inches was an adventurous one. The hostility of Newton to this telescope has probably created a prejudice against it; and it *has* objectionable points, which, however, are, I think, more than compensated by certain advantages which belong to it. Its greatest defect is the difficulty of obtaining a low magnifying-power. As the image formed by the great speculum is magnified by the small one, from five to six times, the eyepiece must be as much weaker than in the Newtonian; and as the lowest power must be such, to obtain the whole effect, that the eye can take in the whole pencil, which according to Sir W. Herschel may not exceed two-tenths of an inch diameter, we come to rather formidable dimensions for it. With a 4-feet speculum this lowest power $=240$, and the Huyghenian eyepiece which gives it is nearly 9 inches diameter and 12 long. The glass for its lenses, though it need not be so faultless as for an object-glass, must be of good quality, and therefore costly. This is not of so much importance as the thickness of the glass in the lenses, which, as I have already shown, diminishes the light, and this thickness cannot be diminished without a corresponding decrease of the field of view*. In a telescope of this size it might perhaps be desirable to employ a triple eyepiece, possessing the Huyghenian properties of achromatism and equal flexure of the pencils; such a one, in which the distance of the second and third lenses $=\frac{3}{4}$ the focal length of the third, would have only 0·6 the thickness of glass, and this difference might probably be more than equivalent to the extra pair of reflections. This eyepiece has a much flatter field and is as sharp as the Huyghenian.

Secondly, the small mirror is something larger than its rival's, and therefore intercepts more light; the difference is only a fiftieth of the whole, and it must be remembered that the central rays are not those which give the best vision.

Thirdly, the rays traverse the tube thrice, but in the other a little more than twice;

---

* But as to this, see Appendix.

as, however, the Cassegrain is shorter, the space actually traversed, and therefore the chance of disturbance from this cause are as 1·12:1. Even this difference is nearly obviated by the lattice-tube.

Fourthly, NEWTON advanced an objection which is often urged. When light is reflected very obliquely from a body even of feeble reflecting power like glass, the reflection is almost total, its intensity decreases with the incidence, and when that is perpendicular, becomes very feeble. Now in the Cassegrain the incidence is nearly perpendicular, in the Newtonian at 45°; and hence he inferred that the latter has most light. But we now know that metals reflect differently from glass, and that the intensity of their reflected light follows a more complicated law. It *decreases* down from the perpendicular incidence to one depending on the incidence of maximum polarization (which is different for different rays), and then increases till at 90° the reflection is total. In the researches to which I have already referred, M. JAMIN has given the intensity of red light from speculum metal, which when perpendicular $=0·692$, but for 45° is only 0·646; for the other rays the intensities are less, but follow the same law; so that the advantage is nearly $\frac{1}{20}$ *in favour of the Cassegrain.*

The other advantages are, first, the tube is shorter, therefore lighter, and less acted on by the wind; second, the magnitude of the second image gives facility for micrometer measures; it is also flatter than in any other telescope; third, the errors of the small speculum tend to correct those of the large; and this is of some importance when they have to be repolished by persons not so skilful as the original maker. It is easier to figure the small mirror properly than the plane one of the Newtonian. Fourth, the greatest of all is the facility which it offers to the observer. The eyepiece is near the ground, and travels in a spherical surface of some 7-feet radius while the telescope sweeps the whole sky; the observer has to move but little, and the observing chair is light and easily managed. But with the Newtonian he must be at the upper end of the tube, which with a 4-feet looking to the zenith would be at least 37 feet above the ground; and he must have an adequate apparatus to support him, the use of which requires much labour and is not altogether exempt from danger. This had most weight in deciding the Committee in favour of the Cassegrain, and the trials which have been made of the instrument since its completion fully justify their preference.

In determining the relative powers of the specula and the lowest eyepiece, special formulæ were in this case required, and those found in ordinary treatises of optics have the defect of assuming the distance of distinct vision infinite in respect of the focal lengths of the lenses. The conditions of the problem are three. 1. The opening in the large speculum should be as large as the aperture of the small one: no light is lost by this. 2. The opening of the field-lens of the lowest power should be of the same size to obtain the largest possible field of view. 3. The lowest power must be such that the eye can take in the whole emergent pencil. Call $F, f, f', $ and f'' the focal lengths of the specula and the lenses of the Huyghenian, A and a the apertures of the specula, d and d' the distances of the first and second images from the small speculum, φ and u

those of the second and third images from the first lens, and z that of the fourth (a virtual one) from the second lens, then the fourth image is seen directly by the eye placed at the eyestop: this stop must be at the image of the small speculum formed by the second lens, and of the same diameter as that image, to exclude all light except what comes from the specula. The distance of the stop from the lens $=\frac{1}{2}f''+\tau$, τ being a small quantity, this distance $+z=\mathrm{V}$ the distance of distinct vision. Hence we obtain in succession

$$z=\frac{2\mathrm{V}-2\tau-f''}{2}\,;\quad u=\frac{f''(2\mathrm{V}-2\tau+3f'')}{2\mathrm{V}-2\tau+f''}\,;\quad \varphi=\tfrac{3}{4}\frac{f''(2\mathrm{V}-2\tau+3f'')}{\mathrm{V}-\tau},$$

and hence

$$\text{magnifying-power } \mathrm{M}=\frac{\mathrm{I}_{\mathrm{IV}}}{\mathrm{V}}\times\frac{\mathrm{F}}{\mathrm{I}_1}=\frac{2\mathrm{F}d'}{f'd}\left(1-\frac{\tau}{\mathrm{V}}\right).$$

As the small speculum should receive all the light from the large one, $d=\frac{\mathrm{F}a}{\mathrm{A}}$, and as in these eyepieces f' bears a given ratio to $a'=a$, we have $a=nf'$; and substituting these in M,

$$\mathrm{M}=\frac{2\mathrm{A}d'}{nf'^2}\left(1-\frac{\tau}{\mathrm{V}}\right);\quad d'=\frac{\mathrm{M}nf'^2}{2\mathrm{A}\left(1-\frac{\tau}{\mathrm{V}}\right)}.$$

But we have a second value of d',

$$d'=\mathrm{F}-d+b+\varphi,$$

b being the distance of the great speculum from the first lens; and equating the two,

$$f'^2\times\left(\frac{\mathrm{M}n}{2\mathrm{A}\left(1-\frac{\tau}{\mathrm{V}}\right)}-\frac{1}{4\mathrm{V}\left(1-\frac{\tau}{\mathrm{V}}\right)}\right)+f'\left(\frac{n\mathrm{F}}{\mathrm{A}}-\tfrac{1}{2}\right)=\mathrm{F}+b,$$

which, when A, F, n and V are known, gives f', and thence the other elements of the telescope. In this case $\mathrm{F}=366$ inches, $b=11$, $\mathrm{A}=48$; opticians generally make $n=0{\cdot}5$. About V there is doubt; it has been estimated from 10 to 5 inches, but I will take 8 inches, that adopted by Sir W. HERSCHEL, and several others. $\mathrm{M}=240$*, hence

$$f'^2\left(\frac{1{\cdot}21875}{1-\frac{\tau}{\mathrm{V}}}\right)+f'\times 3{\cdot}3125=377.$$

As τ is small, omitting it, we get an approximate value of f', and thence of d', from

---

* M is nearly inversely as f'; for though $\frac{d'}{d}$ changes with the adjustment of focus, the change is trifling. It may also be remarked that the common mode of getting M, dividing A by x, the diameter of the image of the large speculum at the stop is not correct unless f' is small; the expression is

$$\mathrm{M}=\frac{\mathrm{A}}{x}\quad 2\varphi\left(\frac{2\mathrm{A}}{f'^2}+\frac{\mathrm{F}}{d'}\left[\frac{1}{2\mathrm{A}}-\frac{1}{f'}\right]\right).$$

which τ is found $=0{\cdot}2051$, and thence finally $f'=16{\cdot}09477$. Omitting the effect of τ, the field of view is in general $\theta=\frac{\text{cotang}\,1'}{\text{M}}$; hence the constants of the telescope are

Large speculum $\text{F}=366$ inches
$\text{A}=48$ „
Small speculum $f=74{\cdot}71$
$a=8{\cdot}05$
$d=61$
$d'=332{\cdot}31$
$\frac{d'}{d}=5{\cdot}4477$
Lowest power $f'=16{\cdot}10$
Distance of eyestop from 2nd lens . . . . . . 2·89
$\text{M}=240$
$\theta=14'{\cdot}32$
Equivalent focus 1994

As soon as these were decided on, the contract (which, beside the telescope and a duplicate large speculum, included an apparatus for polishing and a steam-engine for working it) was signed at the close of February 1866, and the preparations for casting the specula were urged rapidly forward. All had been so carefully considered by Mr. Grubb, that scarcely in any instance was there any necessity to change what he had planned. While these were going on, much progress was made with the more massive parts of the equatorial, and the polishing-machine was got ready. The alloy for the specula was also prepared. It is that of Lord Rosse, four equivalents of copper to one of tin; it possesses more power of resisting tarnish than those which deviate a little on either side of this proportion, and is probably as reflective as any. The liability of good speculum metal to tarnish has been much exaggerated. I have elsewhere given some proofs of this, and may add that there is at the Armagh Observatory a six-inch Gregorian by Short, bearing the date of 1745, which is nearly as bright as at first. As to this Mr. Lassell and Mr. W. De La Rue are good witnesses, especially the latter; for his 13-inch showed no signs of tarnish, though it was for several years exposed to the influence of photographic chemicals, some of which are very bad neighbours for polished metals. Like most other brilliant metals, not excepting silver, it reflects the less refrangible rays in greater proportion than the others, which gives stars a tendency towards red or orange in reflecting-telescopes. This, perhaps, may not be the case with an alloy proposed by Rev. William T. Kingsley, who adds to the above compound one-fourth of an equivalent of zinc. A small piece of this, with which that gentleman favoured me, is so white* that, though in uncertainty as to its permanence, I did not venture to propose casting a large speculum of it, Mr. GRUBB thought so well of it that he has tried it in a duplicate small speculum of 8 inches, which will test its endurance.

From the great difference between the melting-points of copper and tin, and the great liability of the latter to oxidation, the alloy is generally formed by pouring the tin into the melted copper, stirring them, and rapidly casting into ingots. The alloy fuses at a far less heat than the copper, and the castings made from the second melting are supposed to be less porous. Pores, I believe, are never totally absent; it seems that the alloy absorbs gases at a high temperature, as is notably the case with silver and copper, and as has lately been shown in some remarkable instances by GRAHAM for some other metals. Copper when so charged with oxygen is brittle, and it is made marketable by "poling," stirring it while fluid with a pole of dry wood, the carbon and hydrogen of which combine with this oxygen as they bubble through it; and the same process has been found to lessen considerably the porousness of speculum metal. All these precautions were taken here.

†[Plate III. fig. 1 is a plan of the casting- and annealing-room, 36 feet long by 16½ wide. A is the hot hearth for heating the bed of hoops which (as described by Lord ROSSE) forms the bottom of the mould. It consists of four low pillars of brick with intermediate grates for coke fires. B is the melting-furnace (which replaced two smaller ones used in mixing the alloy); it is similar to the common brass-founder's one. Its internal dimensions are 42 inches square by 69 from top to the fire bars, with a central pillar rising 15 inches above them to support the crucible. C is the mould as laid for a casting; and at D is a crane which commands A, B, and C. It also commands E, the open cradle, seen in section (Plate IV. fig. 8), in which is placed the crucible full of fused metal previous to pouring. F is an inclined causeway leading to the mouth of the annealing-

---

* The experiments of JAMIN, already referred to, give the coefficients of perpendicular reflection for each ray from several metals. I give those for speculum metal and zinc.

	Speculum.	Zinc.
Red	0·692	0·576
Orange	0·654	0·594
Yellow	0·632	0·602
Green	0·625	0·616
Blue	0·606	0·628
Indigo	0·599	0·635
Violet	0·593	0·636

It appears from this that while the reflective power of the speculum metal decreases as the refrangibility increases, that of zinc increases. It is therefore possible that a proper mixture of the two might act equally on all the rays.

† The matter enclosed in brackets is contributed by Mr. GRUBB; and I am sure that the scientific world will duly appreciate the valuable information which he has so liberally communicated.

oven G. This oven was constructed with great care; it is circular, to ensure uniformity in the cooling of the enclosed speculum, and is strongly bound with a massive band of iron to prevent cracking. Upon a thick foundation of rubble work were laid several courses of brick with a layer of sheet iron interposed to prevent moisture rising from the ground, and on this were constructed the fire-place and flues for heating the bed of the oven. This bed is formed, first, of several courses of fire-bricks, on which are laid fire-tiles 12 inches square previously ground separately to the required curve, and then set so as to form a continuous bed of the radius required for the under side of the speculum. The circular wall of the oven is 27 inches thick, and the details of its construction are fully shown in Plates III. & IV. figs. 2 to 8. The system of flues below the bed, of which one or more can be readily stopped if required, gives great facility for heating it equably; and the wall and arched roof of the oven (which was covered with ten tons of sand) are heated by a mixed fire of coke and turf, burning in the oven itself, the combustion being regulated by its independent air-hole, damper, and chimney.

For the quick opening and closing of the mouth of the oven, a series of cast-iron stoppers were provided, coated internally with loam, and with removable handles outside. These, when *in situ*, complete the circle of the wall, and give great facilities for opening and closing the oven when the speculum is introduced.

A single crucible of cast iron holds enough of metal for a casting; it was cast with the precautions indicated by Lord Rosse; its internal dimensions are 25 inches diameter, 32 inches deep; the bottom is rounded, and its thickness is from 2 inches there to 1½ at top. It easily holds 30 cwt. of the alloy, 27 being required for a 4-feet speculum.

The operations of casting and annealing were conducted essentially as described by Lord Rosse, with such modifications as the case required, or were indicated by experience. In constructing that part of the mould which forms the edge of the speculum, a different plan was followed from the beginning, for two reasons. First, Lord Rosse had experienced a difficulty in "timing" the operation, because the wet sand-ring which was the edge of the mould was quickly dried when placed in contact with the hot bed of hoops, and consequently was liable to crumble down. Second, the plan for lateral support of the speculum proposed by Mr. Grubb (G. M. T. Correspondence, p. 25) makes it desirable that the speculum should be cast with a central band about ¼ inch thick, and one-third of the speculum thickness in breadth; and to have effected this with a mould of damp sand would have been nearly impracticable. The edge of the mould was therefore formed as follows. A strong sheet-iron hoop, 8 inches deep, and of the same diameter as the bed of hoops, strengthened internally with rings of angle-iron, and its lower edge turned true, was lined with loam moulded to the required shape. This being fully dried, the ring was attached by clamps to the bed of hoops previously heated, where it remained while other matters connected with the casting were preparing. It may be remarked that this ring was not withdrawn from the speculum when it was removed to the oven; this was convenient for the manipulation, and Mr. Grubb thought it would probably assist in the annealing. It has been used thus three times, and has sustained no injury, nor even oxidation of its surface.

To provide the hole required in the centre of the Cassegrain speculum, a core prepared in the usual manner, 7 inches diameter, was attached to a stout bar of iron extending across the hoop-ring, and clamped to it before pouring.]

On July 2, 1866, the casting of the first speculum was commenced. At 1 P.M. the crucible was set in its place, and the furnace filled with fuel was lighted at the top, and cautiously heated. At 2 A.M. on the 3rd the crucible was at a full red heat, and the charging of it commenced. The alloy, broken into small pieces, was supplied slowly, so as not to risk cracking the cast iron by sudden cooling of it. By noon about 7 cwt. was fused; but the furnace, which up to this time was partly fed with compressed peat, became choked, and the heat was much lowered. By energetic poking, feeding with large coke, and adding an extempore couple of feet to the chimney-shaft, the whole 27 cwt. was fused by 8^h 30^m P.M. During the last hour the mould, which had been heated on the hearth A till blue, was transported by the crane to its place and carefully levelled; its surface was washed with kaolin to prevent the alloy from adhering to it.

The oven, which had been for three weeks fired with a mixture of coke and peat both in its flues and chamber, so that its interior was at a full red heat, was raked out in the chamber, and the flues were closed.

All being ready, and the mould covered with a disk of sheet iron to keep out any dirt that might fall into it, the crucible was lifted by the crane from the furnace and transferred to the cradle. The tackle of the crane was now shifted from the crucible to the cradle, and the former tilted until the metal reached its lip; the metal was once more stirred with a birch pole and skimmed, the cover, which during these operations had protected the mould, was removed, and by rapidly turning the winches of the crane the pouring was effected in six seconds—too quickly as it seemed, for from 15 to 20 lbs. of the metal splashed over the opposite wall of the mould. When sufficiently cool (which was tested in Lord ROSSE's manner by tapping with an iron rod), the central core was removed, and the speculum still on the bed of hoops was drawn to the oven's mouth. This was effected by a powerful crab, placed outside the building, acting on a chain and bar passed through the opposite side of the oven, and hooked into a large stirrup attached to the trunnions of the bed of hoops. The latter was now close to a step formed at the oven's mouth, and the bottom of the speculum was on a level with the oven's bed. The stirrup being now removed from the trunnions of the bed to those of the loam-ring, this, with the included speculum still red-hot, was drawn to the centre of the oven, leaving the bed of hoops behind. There was great difficulty in effecting this; and all the appliances provided failed at first to separate them, though a pull of at least two tons was exerted, aided by blows given to the mould with a large piece of wood. At last they were started by one of the party jumping on the chain while it was so tightly strained. The cause of this difficulty, which had well nigh prevented the speculum from being drawn into the oven in time, was soon discovered. The loam-lining of the hoop was not in sufficiently close contact with the bed of hoops, and a film of fluid metal found its way here and there, and sunk partially into the small hollows where the ends of the hoop iron abutted on the ring which confined it. The remedy was obvious—to lute the joint with a little wet loam, which dries instantly; and it proved quite successful in subsequent casting. The iron stoppers of the oven, already described, were set in their places, hot bricks were placed outside them, and the whole luted up; all other apertures, including the entries to the chimneys, were carefully stopped. In doing this a thermo-couple of platinum and iron wire was inserted, so that its joint was nearly over the centre of the speculum; and its elements were connected by copper wires with a galvanometer in Mr. HOWARD GRUBB'S office, where it kept watch over the cooling. Next morning the galvanometer deflected 69°, which in twenty-four days decreased to 0°, showing that the cooling was complete. See Appendix No. I.

The whole was effected without any accident, though the workmen in some parts of the room suffered a good deal from the heat. Gas had not yet been introduced, and the candles melted so quickly that they were of little use.

On removing the casting from the oven it proved to be sound, but its surface was "in winding" about $\frac{1}{4}$ inch; beside these were some of the imperfections which Lord ROSSE has called "crowsfeet." Had these been at the highest part of the surface, they would have disappeared in the grinding; but this was not the case, and Mr. GRUBB preferred recasting it.

[Advantage was taken of breaking up the cast to try its strength. It was placed horizontally on four short blocks of wood under an iron ram weighing 70 lbs., which could fall on it from a height of 4 feet. A strong wooden bar, about 30 inches long, was laid across the speculum and received the blows of the ram without effect; but when a metal bar was substituted for the wooden one, the disk broke into four very equal portions. These, on being brought together, showed no sign of unequal tension, which, along with the considerable force required for fracture, shows how perfect the annealing had been.

The breaking up of this casting revealed an unexpected defect—a cavity about 9 inches long, its cross section being a flattened oval large enough to admit three fingers; it lay in the middle thickness of the metal, and was lined with oxide studded with brilliant metallic crystals. Probably it was caused by air entangled in the rapid pouring, and had the speculum been polished, its figure might have changed with any considerable variation of temperature.

Before a second trial the following changes were made:—

1. To guard against flexure of the bed of hoops, it was strengthened by additional underlying bars, and also placed for the casting on a strong cast-iron frame*.

2. Mr. GRUBB observed in the first pouring that the fluid metal was separated by the central core into two waves meeting at the opposite side of the mould, returning and

---

* The importance of this is obvious; for as the bed of hoops becomes red-hot when the fluid metal is poured on it, it is liable to "sag" under the great pressure, and thus warp the surface of the casting.

again meeting where the metal first touched the mould, which part till then was kept exposed by the impetus of the pour; and he remarked that the surface-lines of imperfect union ("crowsfeet") occurred chiefly where these waves met. To provide for a more regular diffusion of the melted metal over the mould, the cast-iron frame supporting it was made to turn at the end next the crucible, on an axis parallel to that of the cradle. The other end was raised or lowered by a wedge, driven by a rack and pinion under the floor, which again was actuated by a vertical shaft worked at a convenient distance from the casting.

3. As the central core interfered with the free flow of the metal, it was raised $1\frac{1}{2}$ inch above the surface of the mould, and in part supported there by a pin of the same diameter.

4. Instead of kaolin, the heated bed of hoops was washed with two parts animal charcoal and one of plumbago in fine powder, mixed with ale.

These preparations being made, the second speculum was cast September 22, 1866. The oven had been fired for eight days and nights previous, the melting-furnace was lighted the evening before, and the charging the crucible commenced at 2 A.M. and was finished at 11. Up to this time coke was mostly used, and the melting took place earlier than was expected. Peat now was used and the draught greatly reduced; the pouring took place at $12^h\ 20^m$.

The mould was set by the apparatus already described at an angle of 18° with the horizon, so that when a third of the metal was poured it would cover only half the mould on one side, and on the other rise to the edge of the loam-ring at its lowest part. At this instant the mould was rapidly lowered to be horizontal, the pouring being continued without interruption, and the fluid covering the entire surface with a nearly unbroken wave. The time was sixteen seconds. Instead of the bar and stirrup used to draw the cast off the bed, a simple bight of chain was found sufficient, and it was removed into the oven without any difficulty. The thermoscope marked 73*.

The third casting was made November 24, at $12^h\ 10^m$, without any change of the plan which has been described, and both these disks turned out exceedingly perfect.

In these the centre was closed by a piece of metal $1\frac{1}{2}$ inch thick. This piece was removed by grinding with emery and a ring of soft iron (like a trepan saw); it was attached to a double handle and worked backwards and forwards by two men, its entry being at first guided by a board with a hole of the same size. The cutting each disk required three days.]

Difficult as it is to obtain a sound disk of good speculum metal, it is even more so to give it the figure required to form a perfect image combined with a fine polish. The accuracy of the finest cutting-tool that ever was devised falls almost infinitely short of what is wanted here; which can only be obtained by the mutual abrasion of two surfaces working in contact. Yet it is not at first evident how such abrasion can produce any-

---

[*] The details of the pouring, and the removal of the speculum into the oven are shown in Plate IV. fig. 8. The dotted lines show the position of the mould at the commencement of the pouring.

thing but a spherical figure, which is quite unfit for a speculum; for one might expect that the acting surfaces would wear into uniform contact, and therefore uniform curvature. But both the speculum and its polisher are elastic, and allow the contact to continue, notwithstanding a minute difference of curvature; how minute appears from this, that even at the edge of one of these 4-feet specula the distance of its parabola from the circle is only 0·000106.

This being possible, we can increase the abrasion at various parts of the surface till the desired figure is attained. For a long time it was believed that this could only be successfully done by the hand *feeling* the action, but Lord ROSSE found that it could be performed as well, and with more certainty, by machinery. In this he has been followed by others, and though their methods differ, the general principle is the same. The speculum revolves slowly on its axis, while the polisher traverses it more rapidly, describing a track which is some continuous curve, and crosses it in every possible direction, not returning to the same place till after a great number of revolutions. In Lord ROSSE's machine the motion is the resultant of two nearly rectilinear and at right angles, one less and of much slower period than the other. Latterly he reverted to an earlier plan of his own, and used a motion which is nearly elliptic. He also surrounded the speculum with water of a given temperature. Mr. LASSELL and Mr. W. DE LA RUE use an epicycloidal motion, given by a mechanism like that of SUARDI's pen, which is very effective. Mr. GRUBB many years ago made one which combines the power of both these*, but gave it up for the simpler one described here, which is remarkable for the precision and smoothness of its action.

[Plate IV. fig. 9 is an isometrical view of the grinding- and polishing-machine. A, A are strong A-shaped castings connected by three collared stay-bolts and nuts, and having V-shaped bearings at top, in which turn the circular ends, or trunnions, of the hollow prism-shaped casting B. This casting is bored through its centre, and a circle on its upper side truly faced; to it is fitted a spindle with a large face-plate, whose under surface applies to the trued surface of the hollow beam for steadiness, and which serves to carry the speculum. The lower end of the spindle carries the wheel C, by which circular motion is given to the speculum, C being driven by the wheel and pulley D, by means of a belt driven from the shaft.

To the principal framing are attached the brackets E, E, which carry the plate F F; this plate can be raised or lowered to suit different heights, and it carries the horizontal shaft G, which, by means of two pairs of bevil wheels of equal numbers, drives the two vertical shafts with their cranks H, H.

These cranks are adjustable to any desired length of stroke from zero, and give motion to the connecting-rods I, I, which rods are adjustable as to length.

The rods I, I act conjointly upon the lower end of the vertical bar K, and this bar entering a central hole in the grinder (or polisher), produces the requisite horizontal movements in either process. It may be seen that by the adjustment of the strokes of

---

* See for descriptions of these the Art. "Speculum" in NICHOL's Cyclopædia.

the cranks H, and of the length of the rods I, a motion can be produced varying from nearly a straight line through a series of ovals to a circle of any extent, and either concentric with, or excentric to, the underlying speculum.

The vertical bar K passes at its upper end through a hole in a bar attached to the roof of the building, and besides producing the horizontal motion mentioned, performs another important office.

To the lower end of the bar attaches, by a cross-key, a flanged socket which supports the triangular piece I, and at its upper end the bar is attached to a lever with adjustable weights, so that a pull upwards in the direction of the bar to any desired amount is provided, and thus any portion of the weight of the grinding- or polishing-tool in excess of that desired is relieved.

The figure shows the details of the system of support as applied to the grinding-tool. The central piece L being upheld by the bar K, supports the three straight bars M, and these again support the six triangular pieces N.

Thus any portion of the entire weight of the tool is supported equally from eighteen points. The following arrangement was provided for the quick and convenient trial of the speculum while undergoing the process of polishing. To the hollow beam B is attached the apparatus O, P, Q, O being a massive toothed sector, P an endless screw working in same, and Q a wheel and pinion, with a hand-winch. This part of the apparatus serves either to retain the speculum in an horizontal position for polishing &c., or for quickly bringing it to the vertical, when by the opening of those doors, purposely provided in the building, the speculum can be tested upon a day object sufficiently distant; and again by a reverse motion of the winch the speculum is as quickly restored to the horizontal position for continuing the process if required: this facility of testing the figure is of the highest importance to the ease and certainty of the polishing; without it one would be working in the dark.

As it was deemed necessary to grind both back and face of each speculum, two grinders were provided; the form of the back of these is shown in the figure; both grinders were cast with grooved surfaces, forming projecting squares of 3-inch with $\frac{1}{2}$-inch spaces, and prepared in the lathe, one of them flat for grinding the back, the other to the required curvature by a slide-rest actuated by a guide to the intended radius; each speculum was treated as follows.

First, the face was ground to a good surface and approximately to the required curvature, then reversed and ground flat on the back; in both cases the speculum rested in the face-plate of the grinding-machine with felt interposed, and thus free access was obtained to the edge of the speculum for the accurate trueing by grinders of the projecting band. Next, the speculum was once more reversed and placed in its box upon its ultimate supports, from whence it was not disturbed during the subsequent operations of fine grinding and polishing. Before commencing the fine grinding of the face, the grinding-tool was, by cross-cutting the squares on the face, formed into squares of about $1\frac{3}{8}$ inch each, and by a little contrivance and some care the system of supporting-levers, balls, &c., was preserved from the intrusion of either grinding matter or water during the subsequent processes of both fine grinding and polishing*.

The polisher is constructed similarly to that previously used by Mr. GRUBB for smaller specula. It is formed of a great number of strips of fine deal, $1\frac{1}{2}$ inch wide and $1\frac{1}{2}$ inch apart, laid in layers and crossed, each layer being firmly glued and nailed to the next. The pieces, in the middle of its thickness, are thicker in the centre than at the ends, being formed as if they were cut out of a lenticular disk of 4 feet diameter, $1\frac{1}{4}$ inch thick at centre, and $\frac{3}{8}$ inch at edge; on either side of their centre were built, by crossing, parallel slips in layers, the outer course at both sides being without intervals. The apertures occurring round the edge were stopped up, and the whole turned to the required curvature on the face, and strongly varnished. The entire presents the qualities of great stiffness, lightness, and freedom from change of figure from either heat or moisture.

The pitch used for coating the polisher, after being adjusted to the desired hardness, was rolled into parallel thickness, cut by pressure into squares while still soft, and these applied to the surface of the polishers, using a spirit- or gas-lamp for momentarily softening one side of the patch before laying it; the patches were $\frac{7}{8}$-inch squares with $\frac{5}{8}$-inch intervals, and only one hardness of pitch was used.

This method of coating a polisher is (for a large-sized one) necessarily tedious, but can be done by inexperienced hands, and assuming the proper degree of hardness to have been obtained, involves no other uncertainty; it will also serve for several operations. The focus of the first speculum polished was purposely kept within that specified; it turned out to be $30\frac{1}{2}$ feet instead of 32 feet. It was desirable that both large specula should be approximately of the same focal length, and this has been accomplished by the use of a large spherometer, the difference of focus being about 1·1 inch only, or $\frac{1}{240}$ part of the entire.]

In the process of grinding the pressure is considerable, on an average 112 lbs., and the strokes 32 in the minute and of considerable extent; but for polishing all these are much diminished; the pressure is from 30 to 20 lbs., the strokes are 24 in the minute, and a fifth of their former length. The speculum revolves once for 14 strokes; the polisher more slowly, according to the nature of the action. In Mr. W. DE LA RUE'S machine and mine this last motion is effected mechanically, but Mr. GRUBB has not found this to be essential.

The small speculum is polished on a similar machine but much smaller; it is rather too large for hand-work, and requires to be specially figured to match the great one, as that must be parabolic to be available for photography; but in this there is no difficulty, as the tendency to error is in the direction which the small speculum requires.

The uncertainty of the polishing process arises from the pitch not being of a proper hardness (which depends on the temperature), and the hygrometric state of the air. It must always be a very delicate operation, but Mr. GRUBB seems to have reduced the

---

* For some numerical data respecting these operations, see Appendix No. II.

difficulties to a minimum; and it is quite manageable by any one who has a good head and a good eye, with a little training.

[In addition to the ordinary (metallic) small speculum of the Cassegrain there is supplied one of silvered glass, of a construction originally proposed aud described by Mr. GRUBB in 1857 (see Report of British Association for that year).

It consists essentially of an achromatized combination of crown and flint glass, the outer surface, or that which receives the rays coming from the large speculum, being of a curvature which will sufficiently disperse any light *reflected* from same, its fourth surface being made highly reflective by a *thick* deposit of silver. The inner surfaces of the compound are made coincident in curvature so as to admit of being cemented, and the refractive and reflective powers of the compound are so adjusted that their sums (taking into account that the rays are twice refracted) shall be equal to that of an ordinary or metallic speculum of the required focus.

In the supporting of this silvered glass speculum the increased difficulty experienced by others of supporting glass as compared with speculum metal has presented itself. It has not, however, been found that any particular diameter of the lenses being vertical caused a difference in this respect; perhaps this may be attributed to the glass used, having been prepared in the form of disks as generally used in the constructing of object-glasses, whereas it has probably occurred in other cases that, as the quality of the glass suited to the reflectors of M. FOUCAULT is understood to be by no means material, *rolled* glass has been used, and that therefrom arises a difference in different directions to the power of resisting flexure.]

But it is not enough to have a fine speculum unless it is supported in the telescope so that it may be exposed to no stress which can change its figure. A local pressure of a very few pounds at the back or even the edge of one of these massive 4-feet specula would entirely deform its image; and such pressure is not easily avoided in the varying positions of the instrument. In the first reflecting telescopes, the specula were held by three front stops, against which they were kept by three or more screws behind. The screws were afterwards replaced by three springs, and this defective system remained till the HERSCHELS substituted one unobjectionable in principle. They placed the speculum in a strong metal box resting on several folds of soft and elastic cloth. This diffuses the pressure uniformly over the back of the speculum, while the box can rest on adjusting screws; if there were as good a lateral support, which could be easily applied, this system is (except for very large instruments) excellent. M. FOUCAULT supported his specula on air-cushions which were inflated as required; this would also give very uniform support, but would be affected by changes of temperature, and would, it seems to me, be inconsistent with that permanence of index corrections which is essential to the purpose of this telescope. It has not only to show nebulæ and faint stars, but to determine their places to the accuracy of a very few seconds; and therefore at every hour-angle and polar distance, the position of the optic axis of the great speculum with respect to the tube must be almost invariable. This should also be the case with the small mirror; but there the difficulty is trifling. For the other, nothing has been devised more efficient than the arrangement of equilibrated lever and hoop lateral support.

[The first is illustrated by Plate V. figs. 10, 11, & 12. The speculum-box consists mainly of three parts, A, B, and C, fig. 10. A being a strong-ribbed casting, the left-hand side of the figure showing a section through one of the three main ribs; B is a wrought-iron hoop fitting to A, the contact parts being trued in the lathe, and connected by a number of screws; and C is a trued casting fitting the upper part of B, and attached to it also by screws. This construction has the advantages (in addition to that of great stiffness), 1st, of admitting of the grinding and polishing processes being performed without disturbing the speculum, or raising it in its box, the removal of the upper part C being sufficient; 2nd, by the removal of the hoop B, of permitting free access to be obtained to the system of levers &c., forming the vertical support of the speculum.

This system of vertical support is in principle the same as that applied by Mr. Grubb in 1834 to a 15-inch speculum constructed for the Armagh Observatory, and subsequently used by Lord Rosse, Mr. Lassell, &c., for larger specula; but in the present instance it has probably been carried out more perfectly in its details, and these therefore appear to deserve a particular description. In applying this system to 6-feet specula by Lord Rosse, and to 4-feet specula by Mr. Lassell, it was considered necessary, partly from the considerable weight of the levers, and partly from the distance between the plane of the upper ends of the three main adjusting screws, and that of the back of the speculum (this distance being in the case of the 6-feet specula 14 inches), to apply a secondary system of supports to the levers themselves*; and whatever amount of inconvenience arises from this cause, where one diameter of the speculum is always retained nearly vertical, a much greater amount would arise where that condition is no longer to be retained.

The whole lever-apparatus has therefore in the present instance been constructed of steel, by which its necessary weight is reduced to a minimum; and secondly, by an ingenious construction which at first presented much difficulty, and which was ultimately worked out by Mr. Howard Grubb; the secondary levers of the system, instead of being as usual placed between the primary and tertiary, are placed above the latter, or nearly touching the under side of the speculum, the balls of the tertiary levers acting (where necessary) through holes in the secondary. The result of this is that the distance between the back of the speculum and the bottom of the box is only $3\frac{1}{2}$ inches, and any necessity for counterpoising the weight of the supporting levers is removed.

In carrying out in detail this system of support no sacrifice of principle has been admitted. The speculum has been supposed to be divided vertically into forty-eight portions of equal weights contained in three annuli, viz. two outer of eighteen pieces each and one inner of twelve, each single portion being supported under its own centre of gravity. Plate V. fig. 11 is a diagram of this supposed division, and fig. 12 shows

---

* Mr. Lassell's elegant arrangement is described in British Association Reports, 1850, p. 180.

in that third marked A its primary lever, in that marked B its two secondaries, and in that of C its six tertiary, in which the four triangular are triple and the two straight are double. These tertiary levers support the speculum by intervening balls, as originally adopted by Lord ROSSE; but it has not been attempted to keep these balls in their place by a wire and spring, which has been found occasionally to fail, but by being surrounded by a metallic ring allowing of a slight rolling movement, but affording no chance of displacement. The balls, $1\frac{1}{4}$ inch diameter, are of hard cast iron, made approximately true by grinding.

In Plate V. fig. 10, 1 is a vertical section of a primary lever, 2 a secondary, and 3 a tertiary with its balls and rings. Figs. 13 & 14, taken from photographs, further illustrate the system of vertical support; fig. 13 shows the supports as described; fig. 14 the same, but with the addition of two rings of sheet iron which are necessary for keeping the levers in their proper position laterally.

The lateral support of the specula is that originally described in a paper by Mr. GRUBB already referred to. It is shown in section in Plate V. fig. 10, where D is a ring of wrought iron trued after being attached to the inner side of the speculum-box, and E is another ring of same material which fits with a slight looseness on D, and also fits loosely the trued edge of the speculum. It may be seen that, except when the speculum is quite horizontal, its weight pressing against the lowest part of the ring E must bring its opposite or highest part into close contact with the ring D, while that part of the ring E, which the speculum is *pro tempore* bearing against, is thereby removed out of contact with the ring D, and consequently free to move up and down a small but sufficient quantity, which virtually places the speculum under equal advantages as respects lateral supports as if it were held in a flexible band, of the form of the letter U, supported at its upper ends.

This method of lateral support was applied long since by Mr. GRUBB to smaller specula, including one of 20 inches diameter at the Glasgow Observatory, and with entire success; but as grave doubts were expressed recently as to its efficacy in the case of a 4-feet speculum, it is desirable to mention that its efficiency is as decided in this latter case as in that of the 20-inch; no appearance of flexure being perceptible in either instance on placing the telescope in various positions, by which different parts of the speculum, including opposite sides of same, were brought successively into the lowest position.]

The tube consists of two parts; the lower, which is made of strong sheet iron, is firmly secured above in the cradle of the declination-axis, and below to the speculum-box by three strong bolts. Between two of these is a slit, through which, by means of guides passing through two openings above it, a cover which fits closely in the ring C (Plate V. fig. 10) can be introduced to protect the speculum when not in use. Then also the large eyepiece is replaced by a vessel containing quicklime to absorb moisture. This part of the tube is 7 feet long, of which only 17 inches are below the cradle; so the speculum is not quite 40 inches below the centre of the declination-axis. The upper part is lattice-work made of slips of steel $\frac{1}{6}$ inch thick, 3 inches broad at bottom, and tapering to $1\frac{1}{2}$ at top. These were bent round a cylinder of the proper diameter, as shown in Plate XII. fig. 15, and each crossing was secured by a rivet, forming a series of lozenges about 9 by 17 inches. Strong iron rings were rivetted to each end, the lower of which was secured to the close part; and four strong diaphragms were similarly attached at equal distances in its interior. The open part is 21 feet long. As a proof of its exceeding stiffness, may be mentioned that a weight of 112 lbs. hung at its extremity only caused a deflection of $\frac{1}{200}$ inch. The small speculum is carried by a steel arm of considerable depth attached to the second diaphragm, which is of steel, and supported by struts from the first and third. Provision was made for transverse support, but this has not been found necessary.

[Plate VI. fig. 16 is an end elevation, and Plate V. fig. 17 a side elevation of the small speculum in its box, and apparatus for carrying and adjusting it; scale $1\frac{1}{2}$ inch to the foot.

A cast-iron plate *a*, 18 inches long, is attached to the inside of the tube, at one end by a small cross girder *b*, and at the other by a lunette steel ring *c* (fig. 16). To this is attached, by two thumb-screws, the plate *d* (fig. 17), forming the base of the hollow arm A, which is made of steel plate $\frac{1}{16}$ inch thick, and filled with wood to deaden the vibration. This carries at its upper end a V-shaped gun-metal slide B, in which works the arm *e*, to which the speculum-box is attached by three screws, *f*, *f*. Between the plate which forms the end of the arm and the speculum-box are two rings, *g*, *g*, of a greater thickness at one side than the other, by the relative revolutions of which the speculum is adjusted at right angles to the axis of the large speculum. For focusing the arm *e* is acted upon from behind by a screw, to which motion is given by the wire cords *h*. These cords are carried over the pulleys *b* and down the side of the tube to its lower end, where they are wound round a hand-wheel concentric with the eyepiece, to which motion can be given by the observer for the purpose of focusing (see next fig.).

Plate VI. fig. 18 is a plan of the bottom of the speculum-box, which forms the lower end of the telescope, showing the arrangements for hand motions, &c.; scale $1\frac{1}{2}$ inch to the foot.

a, *a* are two of the three bolts by which the speculum-box is attached to the end of the tube; *b*, *b*, *b* the three screws for levelling the speculum: these screws form the support of the three primary levers already described; their heads are countersunk in the bosses, and are covered when not in use by brass caps. A is the lowest eyepiece, power 220; field-lens 8 inches diameter; *c* is the hand-wheel for focusing; the cords *h*, *h* from this are carried up the side of the tube to the apparatus already described (Plate VI. fig. 16 & Plate V. fig. 17). B is the hand-wheel for quick motion in declination. The motion is obtained by a pinion on the upper end of the shaft of the wheel *d*, gearing into a toothed wheel 4 feet 6 inches diameter, attached to the cube of the polar axis, as seen at S in fig. 15. C is the wheel for slow motion in declination. This is obtained by a clamp (S, fig. 15) 4 feet 6 inches diameter, with a tangent screw and parallel motion similar to that afterwards to be described for Æ, and D is the HOOK's-joint handles for the apparatus as there described for slow motion in Æ. E is the finder, 4 inches aperture, fitted with eyepieces of large field.]

The equatorial which carries this huge telescope is not less remarkable. It will be seen in Plate XII. fig. 15 that the polar axis is inverted, so that the declination-axis, and of course the centre of gravity of all the moving parts, is near the ground. So also are the circles; which gives extreme facility in setting or reading the instrument. The axes are exceedingly massive; but from the beautiful arrangement of counterpoises which is adapted to them, their motion is very easy. One of these is seen at K (fig. 15); it relieves the upper pivot of the polar axis from its lateral friction to any required amount. Another, F, does the same thing for the lower pivot, and the peculiar one, L*, takes off the end pressure on the lower pivot. The result of their combined action is, that the instrument is turned round this axis by a force of 5 lbs. at a leverage of 20 feet.

[Plate VI. fig. 19 is an end elevation, and fig. 20 is a cross section of the upper end of the polar axis resting on its bearing; scale 1½ inch to the foot.

The axis in this part, 12 inches diameter, rests on two blocks of gun-metal inserted in cast-iron wedge-shaped pieces, *b*, *b'*, sliding in a horizontal groove, and acted upon by the screws *a*, *a'*, by the combined action of which the axis is adjusted in the direction of the plane of the meridian, or at right angles to it. At *c* (Plate VI. fig. 19) is seen the roller, 8 inches diameter, by which the Y supports are relieved of any desired portion of the weight of the axis, &c. This roller is acted upon by a pair of steel levers of the proportion of 3 to 1, to which weights are attached hanging down the eastern side of the polar pier. The fulcra of these levers are capable of adjustment, so that the roller may be brought exactly under the centre of the axis, as it is adjusted by the screws and wedges *a a'*, *b b'*. At *d* (Plate VI. fig. 19) is seen a sector acted upon in like manner as the roller by a lever and weights hanging down the western side of pier. This exerts an upward pressure on the bar *e*, which is connected with the relief of the friction of the declination-axis (see fig. 25, where this apparatus is described).

Plate VI. fig. 21 is a side elevation of the lower bearing of the polar axis, showing the plummer block in section; scale 1½ inch to the foot.

a is the lower pivot of the polar axis terminated by a piece of chilled cast iron, *b*, polished flat on its lower face. This under face revolves in contact with a piece of bell-metal *c*, flat on its upper side, and partially spherical on its lower, bearing in a correspondingly shaped spherical annulus formed to receive it in the bottom of the plummer block. This arrangement enables the bell-metal cushion to take its own position, as the axis is adjusted by the screws and wedges in the upper bearing (see *a a'*, *b b'*, Plate VI. figs. 19 & 20), and so ensures an equable bearing throughout the whole of the surfaces in contact of the pieces *b* and *c*. Although the component of the weight of the telescope

---

* The chain connected with the crank arm L is peculiar. It is made of circular iron disks connected by semicircular links of steel. Each link can twist a little on its partner with very little friction. They are hardened at their point of action; their ends pass through holes in the disks where they are secured by nuts, and can easily be removed for repair. No chain of the common construction would answer here.

acting upon this face is about five tons, any portion, or all of this, is relieved by the lever-apparatus on polar pier as seen in general drawing (Plate XII. fig. 15). The sector for relieving the lateral pressure of this bearing with its slide-box, springs, and adjusting-screw is seen at A. This sector is 27 inches radius, and works on a 1-inch hardened steel pin held in a cast-iron frame sliding in an outer box. This frame is forced up by the screw *d*, acting through the lamina of steel springs *e*. This sector relieves any desired position of the six-tons pressure in this direction, the friction due to this being reduced in the proportion of 54 to 1. At H are seen the fixed and differential hour-circles, 34 inches diameter, the lower (fixed one) reading sidereal time—Æ by its two fixed verniers, and the upper being set to sidereal time by its fixed verniers, two differential verniers read true Æs. They are divided on an alloy of palladium and silver to 1^m, and the verniers read to 1^s. For the purpose of setting this differential circle, pins *f*, *f*, *f* are inserted in it, by which it may be turned to its approximate position when the final adjustment is made by a delicate tangent motion.

Plate VII. fig. 22 is a plane of the Æ clamp and clock sector removed from the axis; scale 1½ inch to 1 foot.

The sector driven from the clock by an endless screw is strung on a portion of the polar axis 7½ inches diameter, immediately above the hour-circles by the cast-iron piece A bored accurately to fit it; to this are attached two steel tubular arms which carry on their extremity the gun-metal sector B, 5 feet radius; these are strongly braced with cast-iron lattice trussings, which carry at 3-feet radius a square-threaded tangent screw *a*, communicating with the clamp C by the nut-and-link motion *b*, shown in larger scale and described in Plate VII. figs. 23 and 24. The clamp C, 20 inches diameter, is clamped or unclamped to the axis by half a turn of either of the screws *c* or *c′*. When unclamped the instrument is free for motion in Æ by the quick-motion gearing, driven by the hand-wheel G (Plate XII. fig. 15). When clamped, the clockwork being in motion, the telescope follows the object. The final adjustment in Æ for bringing the object into the centre of the field of the telescope is effected by the differential screw *a*, actuated through the shafts *e*, by HOOK's-joint handles attached to either *d* or *d′*.

Plate VII. fig. 23 is a plan, and fig. 24 a vertical section of the parallel-motion arrangement for the tangent screw referred to above; scale ½ size.

Owing to the great sizes and weights of the masses to be moved, the ordinary constructions extant were considered insufficient. In the arrangement as adopted the screw is supported in bearings at *both* ends. This involves the necessity of the nut moving in a straight line, while the arm which carries it describes an arc of a circle. This is provided for by the arrangement shown in the figures. *a a* is a portion of the screw (which is purposely made of considerable length) working in the nut *b b*. This nut has a pair of trunnions towards one end, A A, working in the inner frame *c c*, which has itself a pair of trunnions, B B, working in the outer frame *d d*, which is attached to the arm of the clamp. At *e* is seen a counter-nut to take away any loss that may be occasioned by the wearing of the screw. This nut is cut into teeth on its edge, and is kept in its place by a small brass cap *f*, with a pair of feathers on the inside which slide into two of the teeth of the nut.]

The declination-axis has also its three sets of counterpoises; but their function is of a more complicated character. The weight of itself, with the telescope and counterpoises, acts in the vertical passing through their centre of gravity, and may be conceived as the resultant of three rectangular components, one parallel to the polar axis, one parallel to the declination-axis, and one perpendicular to both. The first of these is constant in magnitude and direction, the others vary from 0 to a maximum at an inverse rate. The two first tend to make the axis shift in its Y's transversely and leave its bearings, the third to jam it against the cube of the polar axis.

[The second and third components are relieved by the mechanism shown in Plates VII. & VIII. figs. 25, 26, 27, and 28. It consists of two nearly semicircular cast-steel rings of a strong section. These surround the declination-axis at the point where its axis intersects that of the polar axis, and where it is shaped as in Plate VIII. fig. 26. Between the jaws of these rings are bolted the gun-metal blocks *c*, carrying each three rollers, two of which, *d*, *d*, roll on the trued rings *f*, *f* of the declination-axis, while the third, *e*, acts at right angles to the other two in a groove formed for the purpose in the declination-axis. The lower semiring has a steel stud *g*, which enters into a cavity prepared for it at the bottom of the polar axis, and forms the fulcrum of the lever. The upper ring is prolonged into a steel bar stiffened with a cast-iron jacket. This bar passes up through the polar axis, and projects at the upper end, where it is acted upon by a small sector and lever which produce a sufficient upward thrust (see Plate VI. fig. 19 *e*). By this means any desirable portion of the resultant of the second and third component can be relieved.

Plate VII. fig. 25 is an end view of this apparatus in its position embracing the declination-axis.

N.B. A portion of the axis is broken away to show the roller *e* working in the groove.

Plate VIII. fig. 26 is a plan of the rollers and declination-axis.

Plate VII. fig. 27 is a vertical section of the steel ring and rollers.

Plate VII. fig. 28 a side elevation of the same. It should be mentioned that, for the efficient working of this apparatus, it is necessary that both polar and declination-axis should be balanced "inter se" round their point of intersection. This is not the case in some instruments which have the counterpoise of the telescope hanging from the opposite side of the polar and not the declination-axis.

When this adjustment has been completed, then, and *not till then*, the first component may be relieved by the apparatus which is partly seen at O, Plate XII. fig. 15, and more fully in Plate VIII. figs. 29 & 30. Fig. 29 is an elevation of the larger, and fig. 30 half elevation, half section of the lesser roller-frames, scale 1·5 inch to 1 foot. That represented in fig. 29 is applied to the larger or telescope-end of the axis, immediately outside the larger bearing, between it and the cradle. The smaller, fig. 30, is applied immediately outside the smaller bearing, and can be seen at P in Plate XII. fig. 15. At *a*, *a'* are seen the ends of the two steel levers which bear up the roller-frames. The fulcra of these levers are attached to the sides of the cube of the polar axis; one end of each bears up the larger frame (Plate VIII. fig. 29), as at *a*, *a'*; the other is attached to the end of a cross lever dropped on the stud *b* (Plate VIII. fig. 30), and fastened by a nut which is tightened till the elasticity of the levers acts with sufficient power to give the required relief of the friction. This is seen in Plate XII. fig. 15.]

As the size of the rollers is limited by the dimensions of the cube C (Plate XII. fig. 15), they are not quite as effectual as the antifriction apparatus of the polar axis; for it requires $12\frac{1}{2}$ lbs. acting at the leverage of 20 feet to turn the telescope round this axis. Still one man can raise the telescope from the horizon to the zenith in twenty seconds. In reversing it from the east of the pier to west, or *vice versâ*, two men are necessary for quick work, as it must be moved in P.D. as well as Æ; they do it in forty-five seconds. The tangent movement in declination is so smooth that a star can be nicely bisected by it. The polar-distance circle P (Plate XII. fig 15), divided like the others on the alloy of palladium and silver, is 30 inches diameter, and has two verniers which read to $10''$.

[The clock is lodged very compactly in a hollow in the pier; a shaft passes from it gearing with a vertical one which drives the screw of the sector. It is regulated by a conical governor, shown in Plate VIII. fig. 31 (scale 3 inches to 1 foot). *a* is a double fork-shaped frame of gun-metal, in which hang the two ⊤-shaped pieces *b'*, *b'* carrying the balls A, A', 5 inches diameter, of hollow brass filled with lead. These, when not in action, are retained near their working angle 45° by the piece *c*. Attached to the steel bars are small brackets, *d*, *d'*, carrying screws with divided heads, *e*, *e'*, the extremities of which terminate in small cups to contain pieces of hard leather. These, when the balls attaining their speed fly out, rub on the disk B, the plane of which is set at right angles to the governor's axis of rotation, and by their friction prevent any increase of speed. The lower bearing of the governor's spindle is attached to a sliding-piece C: this slide is worked by a cam, *f*, actuated by the wheel and sector, *g*. The spindle of this sector projects in front of the clock-frame, where it carries an arm playing round a graduated arc, and kept in any required position by a pin and a circle of holes. The initial adjustment of this clock is made by the nuts *h*, *h'*, which alter the working length of the conical pendulum, and the screws *e*, *e'*, which alter its working angle. When the clock is adjusted to sidereal time, these require no alteration; for small differences, as in the case of planets, are corrected by the cam apparatus without stopping the clock. For the moon, the change to mean lunar time is made by a set of differential wheels, which are brought into play by the simple movement of a lever in an instant, and the final adjustment for the lunar rate at the time of observation is made by the cam.]

Mr. Grubb had intended to supplement the action of this governor by an elegant contrivance controlled by an ordinary seconds' pendulum, which was to add or subtract motive power as the clock lost or gained, but on trial we did not consider it necessary. The clock has a great excess of power over any probable resistance that may come into play, and we found that the doubling its actual driving-weight (200 pounds on a single line) accelerated its rate only $\frac{1}{360}$. It rings seconds.

But the excellent action of the clock would be marred unless it were matched by a corresponding accuracy of the screw and sector through which it drives the telescope. These were finished with extreme care, and are believed to be as exact as many dividing engines. The means of obtaining an accurate screw are well known; but it may be useful to describe the process of cutting the sector.

[The arc of this, which is of gun-metal and 5-feet radius, after being duly fitted to the frame of the sector, had several faint arcs described near its edge concentric with the polar axis. It was then detached and transferred to a large wheel-cutting engine, where it was carefully centred by means of the faint arcs just mentioned, using a micrometer-microscope. The proposed run of the sector was two hours, or sixty teeth (the screw being intended to revolve once in two minutes). It was, however, purposely made long enough for seventy teeth, and so many radial lines were drawn on it, using the wheel-cutting engine as a dividing one. Subject to its errors, these divisions represent two minutes of time.

The second step in the work was to take sixty-four of these divisions, and to determine their *relative* errors by the process of continual bisection, using a pair of micrometer-microscopes. The third step was to cut from the erroneous divisions, using the table of errors and a micrometer-microscope, a set of corrected divisions.

The fourth step was to cut the teeth from these last divisions; the cutting part of the engine being provided with a clamp and tangent-screw, and also a micrometer-microscope; the last cutter bringing the teeth as nearly as possible to the shape required for the application of the endless screw. The gun-metal arc was then restored to its place in the instrument, and a racked screw of the calculated pitch being passed a few times through the whole extent of the teeth, they were brought to the precise shape required for working with the screw of the clock. The quantity of metal removed in this last process was barely perceptible.

The telescope has nine Huyghenian eyepieces, ranging from 220 up to 1000. It has also a micrometer, whose wires are illuminated in a dark field, and which is also provided with fine steel bars as more fit for faint nebulæ than wires. It is similar to a pair made many years ago by Mr. GRUBB for the Armagh Cassegrain, and for the late Lord ROSSE. Plate VIII. fig. 32 is a down view of it; fig. 33 is mostly sectional, and fig. 34 shows the sliding-pieces or forks which slide in V-grooves planed in the under side of the micrometer-box. The figures are half size. The micrometer-screws have twenty-five threads to the inch, and the number of their revolutions is read off from scales through A, A, glazed openings in the covering plate, fig. 32.

In fig. 33, C is a section of the part which screws into the telescope; to this the micrometer is attached by the ring D, so as to admit of being turned in any direction. E and F are rings connected by the bars G; outside and around the lantern part formed by these bars, revolves a short tube H, to which is attached a conical tube I carrying the illuminating lamp; and inside the lantern, but without touching its bars, stands the concave illuminating reflector K, supported by two studs, L, which are attached to the ring M. This is on its upper edge cut into contrate teeth, which are acted on by the pinion and milled head O.

The nozzle of the lamp being made to turn in the conical tube I, and this latter being (by means of the tube H) revolvable on the lantern part, it follows that the lamp can be set vertical in any position of the telescope, while the reflector K can be revolved by the milled head O till it throws the lamp's light on the micrometer-wires. Thus one lamp is, by very simple management, in every case sufficient. In the Cassegrain telescope there is an eyehole so adjusted that it excludes all light except what comes from the object-speculum: now if the central opening of K be no larger than what will pass that light, it is evident the field will be dark, while the rays of the lamp intersecting in the focus of K will illuminate any object placed there, and of course the wires in whose plane that focus is. The same can be arranged, though not so easily, for a Newtonian. N in fig. 32 is a large milled head, by turning which, Q, the box of the micrometer is made to revolve. It works a pinion which acts on the wheel R, fig. 33. S in both figures is the position-circle reading to a minute by the verniers T, T′. The optical part is peculiar, and such as had been long since applied by Dr. Robinson to the micrometer of the Armagh Cassegrain to obtain a larger field than was given by the usual positive eyepieces. A field glass P, common to all the eyepieces, is placed at a proper distance before the wires, and the eyepieces are single lenses placed behind them. This greatly enlarges the field of view without producing any sensible distortion of the image in a Cassegrain*. The micrometer is provided with powers from 300 to 600.]

In using it the small speculum must be fixed in the position which brings the third image into the plane of the wires, and focusing must be effected by sliding the eye-lens.

What we have described comprises all which was included in the contract, but it seemed to the Committee that the instrument would be incomplete without a photographic apparatus and a spectroscope, and they ventured to add these on their own responsibility, sanctioned by the opinion of the President and Council. Some photograms of the moon and stars taken with a temporary apparatus, were considered by the highest authority in this matter, Mr. Warren De La Rue, to be of such good promise that they directed a very complete one to be provided similar to the one used by that astronomer, with only such modifications as the great bulk of the telescope makes necessary.

[The most important details are shown in figures 35 to 38, of which the first two are on a scale of 1 inch to the foot. Fig. 35 is a plan, and fig. 36 half section, half elevation of it. A A A is the angle-iron forming the upper end of the telescope, to which is attached the steel tripod frame B B B, by the thumb-screws *x*, *x*, *x*. This tripod supports the pair of brass tubes *e*, *f*; the steel arms being connected with the outer tube

---

* In the Armagh instrument the values of a revolution of the screws, deduced from ten, twenty, and thirty revolutions of them by transits of circumpolar stars, differ from the mean, $-0''\cdot028$; $+0''\cdot054$; and $-0''\cdot026$, which are quite unimportant.—R.

e by the gun-metal rings C and D (fig. 36). The frame carrying the prepared plate is attached by a convenient arrangement to the upper end of the tube *f*, and the exposing-shutter at the lower end, D, is worked by the lever and shaft, K, shown more fully in the two next figures (figs. 37 & 38). The adjustment for focus is made by the milled head *g* (fig. 26), working the rack and pinion *h*, while a scale of divisions, *s*, is used to register the exact position of the focus. Fig. 37 is a plan, and fig. 38 an elevation of the exposing-shutter, each one-fourth of the full size. B, B, B (fig. 37) are, as before, the three arms of the tripod frame. C is the lower of the two gun-metal rings to which these are bolted. To this ring is attached, by two milled-headed screws E, E, the gun-metal frame D (shown hatched in the figure) which carries the shaft *c* in a pair of bearings *f*, *f*, to which is attached the thin sheet brass shutter F; *a* is the shaft lettered K in fig. 36, which is acted upon from below by the lever K′, fig. 36, and a pair of parallel cords passing down the side of the tube. This shaft, in turning through 90°, communicates a similar motion to the shaft *c*, which carries the shutter by the pair of cranks *b*, *b* and the connecting-rod *d*. As it is desirable to be enabled to open the shutter from either the right or left side to give a greater or less exposure to a particular side of the moon, this shutter is so arranged that, by taking out the two screws E, E, the frame D, which carries the shutter F, can be turned round 180° and fixed in that position; while the connecting-rod *d*, being disconnected by taking out the stud *x*, is thrown to the other side and attached to the spare crank *b*′ at the other end of the shaft *c*. At the same time the edge of the shutter can be adjusted parallel to the terminator of the moon by the rocking-piece G. The necessity, or at least the advantage of this arrangement, was shown in the experimental trials already mentioned; for it was found that to obtain a tolerably uniform picture of the whole moon, many times more exposure was required for the parts near the terminator than for the bright edge. The apparatus includes a photographic micrometer similar to that described by Mr. W. De La Rue in his "Account of the Solar Eclipse of July 18, 1860," Philosophical Transactions, vol. clii. page 373, for tabulating the Photograms.

The spectroscope has some modifications of the common construction, which are intended to make its adjustments more permanent. This is specially important in the present instance, because, as the telescope's equivalent-focal length is very great, a minute shift of the collimator, the prisms, or the observing-telescope would make it extremely difficult to find the object's spectrum. It is also desirable that the reading off the places of lines should not be embarrassed by continual changes of index error or prism adjustment, and that the instrument should be able to bear free handling, especially in the dark. Figures 39, 40, and 41 explain the construction, especially those parts which are new. Fig. 39 is half size, figs. 40 and 41 full size. In fig. 39, the part from A to B (shown in section), being of the usual construction, requires no description: the cylindric lens, of 6-inch focus, is of course achromatic and aplanatic. C is a strong cylindric box which holds the prism, and also serves to connect firmly the collimator and observing parts of the instrument. It effectually excludes false light, and protects the prism from dust or moisture. D is one of the prisms *in situ*. E is the observing-telescope, 1·1 inch aperture and 4·5 inches focus (the collimator is the same). The manner in which it is mounted is more fully shown in figs. 40 & 41. The first of these shows in section the prism-box C; L is a steel centre firmly fitting the bottom of C; on it turn the arms F and G; F being outside the box and capable of being turned into any position, G turning only through a limited arc, equal to the dispersion of the most powerful prism, by a slotting aperture in the side of the box, and carrying the telescope E. K is a circular plate, serving to retain the arm G in its place, and also to support the prism. The manner in which G and F are connected is shown in fig. 41. A portion of G is ratched, in which works the endless screw H, having a micrometer-head to measure fractions of a revolution. The teeth were cut upon an accurate engine, each being fifteen minutes of arc, and the micrometer-head is divided into sixty parts, each of which is therefore fifteen seconds. The revolutions are read on the divided arc seen in fig. 39. It will be obvious from the firmness with which these parts are put together that very little variation of the readings is to be expected. Three prisms are provided, of which two are constructed as shown in fig. 39. The central prisms are of CHANCE'S extra dense flint, to which are cemented outer prisms of light crown. The first of these has the angle of the flint =100°, those of the crown 28°; its deviation for D=48° 3′, and its dispersion from B to G′=5° 5′. The angles of the second are 90° and 29° 15′, its deviation for D=34° 40′, and its dispersion =3° 23′.

The third prism is an ordinary one of dense flint, its angle being 59° 50′, its deviation =48° 15′, and its dispersion=2° 59′. Each prism is permanently fixed to a disk of brass, which by means of steady pins can always be attached to the table K in the same position, and retained there by the milled-head screw F, fig. 39. This method of mounting permits the prisms once adjusted (to minimum deviation for the line D), to be readily placed, even in the dark, at a definite position with respect to the line of collimation. The compound prisms have nearly the same deviation as the simple one, which is very convenient for the observer: they might have been made exactly the same, but it was not thought necessary to fulfil this condition, as the difference is easily provided for. As F and G (fig. 40) turn on the same centre, a removeable steady pin, with as many holes in the former as there are required positions, connecting it with a hole in C, will be quite sufficient.]

As to the performance of this great telescope, it is unnecessary to add anything to the report which the Committee has presented to the Royal Society*, and Mr. LASSELL'S letter to the President. Its light is fully proportioned to its aperture; and in definition on a fine night it is not surpassed by any telescope with which I am acquainted. The movements on its axes are effected with a facility and precision which, when one considers its enormous weight†, seem almost incredible; and it appears to keep its adjustments with admirable steadiness. If, as I trust, it arrives safe at its destination, it will fully repay the magnificent liberality and public spirit of those who ordered its

---

* Proceedings of the Royal Society, vol. xvi. page 313.

† See Appendix, No. III.

construction. It is impossible to contemplate without enthusiasm the treasures of discovery which are opening before the accomplished astronomer who is about to sweep, with an instrument that has but one superior in the world, a sky whose wonders only one has yet explored, in a climate such as British astronomers can only dream of. What strange nebular forms it may reveal, what new configurations of stars, what new cosmical laws it may unfold, what new elements it may disclose, we soon shall know; and the fulfilment of these high anticipations will I am sure be the best compensation to the maker of this noble telescope for all the thought and toil which were required to make it what it is; and also, may I be permitted to say, to the three whom the Society associated with him in this great work, and who, though in a far inferior measure, shared with him the intellectual labour and the anxieties connected with the task. Even the practical experience which has been gained in its construction is a precious addition to our knowledge: and in this belief we have thought it right to put on record its leading facts. They who, as I hope, will hereafter try to equal or surpass the Great Melbourne Telescope will not think these details tedious. Even they who have no special interest in optical or mechanical science may be reminded that every well-established fact, everything which extends man's control over the inert masses or the energetic forces which surround him, is an element of power, is an agent whose potency may extend far beyond his ken, is an everlasting possession of the human race.

Appendix No. I.

Rate of Cooling of the Specula.

[Fig. 42. A represents the temperature-curve of the first speculum, B of the second, and C the mean of the two. The abscissæ are the number of days from the casting to the removal of the specula from the oven; the ordinates are the degrees of the galvanometer. The temperature of A when removed was 70°, about 5° above the air, that of B was 72°, about 20° above the air. The oven, when they were introduced, was believed to be between 900° and 1000°.]

The irregularities in these curves are probably due to changes in the masses of iron which were in the vicinity of the galvanometer. The equatorial was about 200 feet distant, and underwent little change at this time; but other parts were in process of construction at about 60 or 70 feet distance.

No. II.

[Some facts as to the time of grinding the speculum A may be useful. It was commenced October 27. In four hours two-thirds of the surface was in action; in fourteen the whole surface was working, a proof how truly it had been cast. On October 29 a small hollow, 0·25 inch diameter and 0·043 inch deep, was made by a copper drill and emery. When measured next morning the amount ground off was known. This was repeated daily, and it was found that

The quantity ground off in twelve hours	= 0·0193
Total number of hours at this surface	250
Total quantities ground off	0·401 inch.

The total number of hours grinding was—

Rough grinding face	250
Ditto back and edge	400
	650
Fine grinding	200
Removing a scratch	120
Altering focus 9 inches	200
	520
Total rough and fine	1170

This is equivalent to 2050000 strokes of the machine at thirty-three per minute for rough, and twenty-four for fine grinding.]

No. III.

Approximate weight of the principal moving parts of the Telescope.

		lbs.
[Speculum and box		3500
Tube boiler-plate	1300	2670
Lattice	1370	
Polar axis		3200
Declination-axis		1500
Cradle		1100
Counterpoises		4700
Smaller portions		1500
Total		18170

This is very near the original estimate.]

APPENDIX *to the Description of the Great Melbourne Telescope.* No. IV.

By T. R. ROBINSON, *D.D., F.R.S. &c.*

Received February 10, 1869.

Since this Paper was read I have made several observations of the quantity of light transmitted by object-glasses, and determined the index of absorption in various specimens of glass. The results of some of these are in accordance with the opinion which I expressed there; but others present a difference which is very satisfactory as indicating a surprising progress in the manufacture of optical glass.

The photometer which I used is that of ZÖLLNER, respecting the arrangement of which a few words may be useful. On looking into it, the observer sees a luminous circle divided by a vertical diameter into two semicircles, one of which is illuminated by plain, the other by polarized light. Supposing them equally bright, if a piece of glass be interposed in the plain beam, its semicircle becomes fainter, and the brightness of the other must be reduced so as to equal it by turning the eyepiece, in which is a Nicol's prism. The ratio of the intensities is known from the position (θ) into which it is turned. Or the equalization may be effected by changing the distance of one of the lights; and the intensities are as the inverse squares of the distances. I used this occasionally as a check, but do not consider it as accurate as the other. The circle of the eyepiece has two verniers reading to five minutes: this is sufficient; for an error of $2'{\cdot}5$ in the angle will in its maximum effect produce one in the measure of intensity of only 7 in the fourth place of decimals, while the uncertainty of the eye in estimating the equality of the illuminations is thirty-five times as great. I shall return to this immediately.

The photometer is fixed on a board furnished with parallel guides in which the base of the moveable light slides. A block for supporting glasses is also fitted to these guides, and its upper surface is ruled with lines parallel to them, so that any object can be surely placed on it in a given position. The lights were petroleum lamps with the edge of the flame turned towards the photometer: when the wick is not too high, and they have been burning for about twenty minutes, they give an intense and tolerably constant light. The verniers are adjusted to read 0 when the polarized semicircle disappears entirely, and are set to 90° when the lights are adjusted to equality. This equality is verified for each observation; then for any azimuth (θ) the intensity of the light transmitted by the glass $= \sin^2 \theta$. If the lights be of the same colour, the bounding diameter disappears completely and the process is comparatively easy; but if there be any notable difference of tint, it is much less satisfactory. In such cases I found, as FRAUNHOFER had done long since, that one must make this diameter as faint as possible —a fact which implies that the two beams, whether equal in intensity or not, make nearly the same impression on the eye.

I must add that within the last few months my eyes have ceased to be fit for such delicate work, and that most of these comparisons have been made under my inspection by my Assistant, Mr. CHARLES FARIS, and occasionally by Mr. HOWARD GRUBB, both practised and good observers.

In examining object-glasses, they were placed in contact with the emeried disk of the photometer, so that no correction is required for any convergence of the light due to them. The results for them are given in the following Table I.

Description.	Aperture.	Focus.	Intensity.	Obs.
	in.	in.		
a. Triple object-glass	2·75	48	0·5497	15
b. Double................................	3·80	63	0·5962	5
c. Double................................	3·25	48	0·6567	
d. Double................................	6·50	96	0·6772	12
e. Double................................	5·50	...	0·7928	24
f. Double, inner surface cemented...	5·0	...	0·8739	24
g. Double, cemented	12·0	222	0·8408	24

I regret that I had not access to any object-glasses by Fraunhofer[*] or Merz. Of the above, *a* belongs to the Armagh Observatory; it is by one of the Dollonds, older than 1790, and from its small proportional aperture, it is probably one of their first attempts at a triple combination. It is deficient in light, but defines very sharply. *b*. is the original object-glass of the Armagh circle, extremely sharp; but as it could not in this climate be depended on for observing stars below the 8-inch magnitude, it was replaced in 1861 by a remarkable one made by Mr. Grubb, of the same focus, but 7 inches aperture; it was made by Tulley about 1828; the crown is greenish, and I suppose English; the flint was, I believe, from Daguet. I was much surprised at the great absorption of this glass, and therefore took several sets of measures; but they all told the same story. *c* was made for me by Tulley in 1838; its glass is French, the crown is greenish. *d* is by Cauchoix. It came into my possession in 1837, but I have no information as to the maker of its glass; the crown is greenish, and has probably a high n, but its mean thickness is only only 0·39. *e* is by Messrs. Cooke; it had belonged to the late Judge Berwick, an excellent and accomplished man, who perished in the Abergele collision; I do not know its date, but believe it recent; the glass is Chance's. *f* is by Grubb, the glass Chance's: the very high transmission of this lens is in part due to the cementing of the adjacent surfaces, which, while it makes more difficult the correction of spherical aberration, removes almost entirely the reflection at a surface of crown and one of flint: the factor for this =0·9036; and if the I be multiplied by this, we obtain 0·7896, nearly that of *e*, the difference being due to the reflection at the film of cement. *g* is also by Grubb, and cemented; its glass is by Chance.

On examining this Table, the progressive increase in the light of the object-glasses is evident. The first two, which may be considered good specimens of the early achromatics, have less illuminating-power than the Herschelian reflector. A great advance was made by Guinand and those who followed in his steps; and a still greater one by Chance, whose glass is nearly perfect as to colour and transparency.

The same inference follows from my measures of the index of absorption n, which, though not as numerous as I wish, are sufficiently significant. The specimens which I examined were, with two exceptions, prisms; and this form is very convenient. If a ray is incident on an isosceles prism parallel to its base, it emerges parallel to itself after reflection at the base. If A be the angle of the prism and R the refraction in this case, t the course of the ray in the prism $= \text{base} \times \frac{\cos \frac{1}{2} A}{\cos R}$, μ can be found by one of the angles, and from it ϱ^2 computed for an incidence $= \frac{1}{2}A$. I assume as the mean reflection that due to the μ of E; it really is near *b*, but the greater illuminating-power of the yellow rays compensates for this. The due position of the prism is ensured by adjusting its base to the lines on the block already described.

I give the results in Table II., in which are introduced those given in the paper that

---

[*] March 9.—The President sent me his Fraunhofer, 3·2 aperture and about 45 focus. By 16 observations agreeing well, its coefficient =0·7393.

they may be referred to at once; and I add to them one which I found in Bouguer's "Traité d'Optique," which seems trustworthy.

Description.	ϱ^2.	t.	I.	n.	Obs.
1. Prism, originally Captain Kater's...	0·9164	1·125	0·746	0·1829	5
2. French plate, Mr. Grubb		0·75	0·805	0·1728	
3. London plate, Mr. Grubb		0·30	0·86	0·2140	
4. Two of same, Mr. Grubb		0·60	0·77	0·1446	
5. Prism, Mr. Grubb....................		2·00	0·81	0·0617	
6. Bouguer's glass	0·9109	3·200	0·500	0·1895	
7. Gassiot's prisms........................	0·8380 0·9763	1·915	0·2490	0·6209	5
8. Prism by Dubosq, flint...............	0·8878	1·730	0·6844	0·1504	12
9. Prism by Merz, flint..................	0·8647	1·580	0·7549	0·1089	5
10. Prism by Merz, crown	0·8935	2·431	0·7253	0·0858	5
11. Prism by Merz, flint..................	0·8854	1·500	0·7550	0·1065	24
12. Prism by Grubb	0·8696	2·721	0·8196	0·0218	6
13. Cylinder of crown	0·9166	4·300	0·8155	0·0272	12
14. Cylinder of flint.........................	0·8907	4·400	0·8563	0·0090	6

No. 1 was shown to me in 1830 by Captain Kater, as the *chef-d'œuvre* of the Glass-Committee; he used it as the small speculum of his Newtonian. Afterwards it came into the possession of the late Lord Rosse, who made the above measures with Bunsen's photometer in 1848. It is English plate, greenish. It is curious that its n should be so near No. 6, a century before.

Nos. 2, 3, 4, 5 were measured by Mr. Grubb in 1857. No. 5 was a prism of 90°. He does not remember its history; but evidently it was of Chance's glass.

No. 6 is described by Bouguer as "glace," 3 Paris inches thick. It was probably that of St. Gobain, which I suppose has not varied in composition, and I have used *its* μ in computing ϱ^2.

No. 7 is two prisms of 60°, which Mr. Gassiot, with his wonted kindness, entrusted to me for some inquiries about the improvement of the spectroscope. They are by Merz, of glass which seems nearly identical with Faraday's dense glass, having a specific gravity of 5·1, and a mean $\mu=1·7664$. It is very pellucid, but, like its prototype, has a yellowish tinge, which I suppose is given by the large proportion of lead. As Merz does not polish the base or ends of his prisms, I could not use my usual method, but I put them together with the angles opposed, and a drop of olive-oil between*. The incidence could not be perpendicular, as there was a partial reflection at the oil, but a full beam passed at an incidence of 30°. The great absorption is remarkable, and cannot, I think, be explained by the colour of the glass. The side of the largest of these prisms$=2·60$.

No. 8 is of 60°; its side$=1·90$, and its μ for $E=1·6200$. It is free from colour, and an evident improvement on the earlier ones.

No. 9, a prism of 90°, was given to me by Dr. Lloyd for a small mirror in the Newtonian form of the Armagh 15-inch reflector. I was surprised that it had so little superiority over the metal one; but the I explains this. A prism of No. 14 would have told a different story†. Its base$=2·01$, and its μ for $E=1·6188$.

---

* The second ϱ^2 given is that of the film of oil.

† With such a prism the coefficient of the Newtonian would be 0·548.

No. 10, of 90°, was obtained by the late Lord ROSSE to be similarly used in his 3-feet Newtonian. Like me, however, he was disappointed. Its base$=3{\cdot}05$, and its μ for $\mathrm{E}=1{\cdot}5321$.

No. 11, of 60°, obtained by me at Munich in 1837. For these measures I had the ends polished flat; its μ for $\mathrm{E}=1{\cdot}6405$.

These three show considerable progress, and an object-glass made of such materials would have a great power of transmission, though much behind the following.

No. 12 is of 90°. Its glass is from CHANCE; its base$=2{\cdot}65$, and its μ for $\mathrm{E}=1{\cdot}6216$.

No. 13 is a cylinder 2·2 inches in diameter and 4·3 long, which Mr. GRUBB obtained from Messrs. CHANCE for these measures; its μ for $\mathrm{E}=1{\cdot}5200$.

No. 14 is a cylinder got at the same time, 2·1 inches in diameter and 4·4 long; its μ for $\mathrm{E}=1{\cdot}6126$; the ends of both are polished flat, and they are of wonderful transparency.

I was nearly as much surprised at the very low value of n in these three last specimens, as I was at the great absorption of the object-glasses a and b in Table I. But the following considerations will show that these measures, especially in the two last, must be very near the truth. I find from 110 observations, in which θ ranged from 29° 23′ to 75° 27′, that the probable error of a single determination of I by the Zöllner$=\pm 0{\cdot}0251$. As $d\mathrm{I}=d\theta\times\sin 2\theta$, it may be inferred that the probable error of the single observations for the I of No. $14=0{\cdot}0157$. Again, $dn=\frac{d\mathrm{I}}{\mathrm{I}\times t}$; and the probable error of this $n=\pm 0{\cdot}0019$, only a fifth of its actual value, so that its correctness has a high probability. This is confirmed by the values of I in the object-glasses e, f, and g, which would not be possible if n was much larger. For instance, if it were$=0{\cdot}1$, the I of g would be 0·7585 instead of 0·8408.

If, as I see good ground for hoping, Messrs. CHANCE shall succeed in manufacturing large disks of the same perfection as these two cylinders, my comparison of the achromatic and the reflector must be considerably modified. I think we may assume $n=0{\cdot}02$ as the highest excellence likely to be attained on such a scale; and if this be introduced into the expression given in the paper for the intensity of the achromatic, it becomes

$$\mathrm{I}=\log^{-1}(9{\cdot}90964)\times e^{-\mathrm{A}\times\log^{-1}(7{\cdot}46482)}.$$

If this be multiplied by A^2 and equated to $0{\cdot}401\times 48^2$, the quantity of light transmitted by a 4-feet Newtonian, we have an equation which when solved gives 35·435 for the aperture of an equivalent achromatic. This aperture would be diminished if the process of cementing were found applicable to lenses of such magnitude; but if such an object-glass were ever attempted, its focus would probably be much shorter than eighteen times its aperture, and therefore its increased thickness would produce a contrary effect.

I shall conclude with suggesting that, as very slight variations in the manufacture of glass seem to make great changes in its absorptive power, it would be prudent to examine the value of n in the disks intended for lenses of any importance. This could be done by polishing a couple of facets on their edges, and need not involve the sacrifice of many minutes.

Fig. 1.

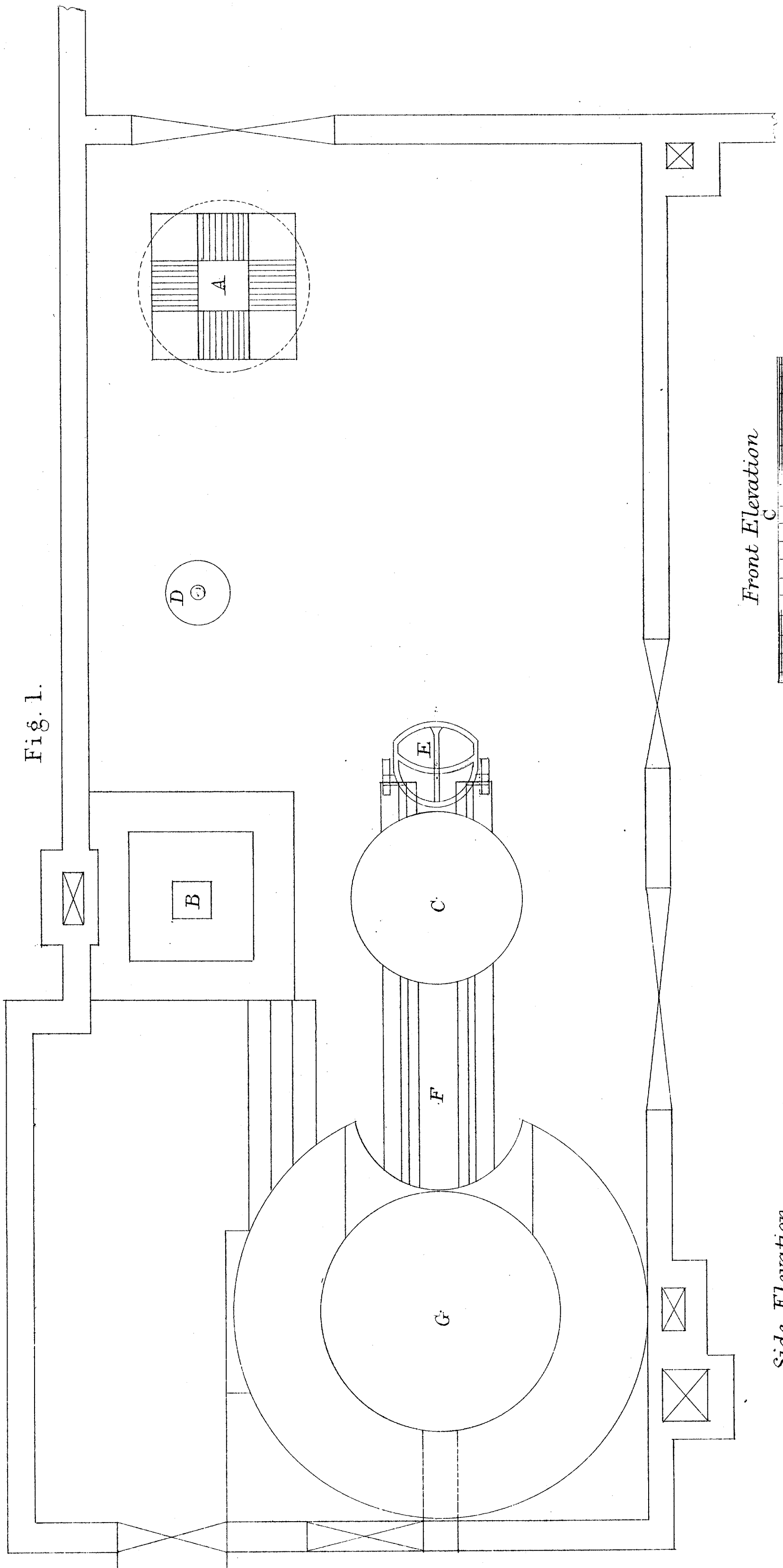

Annealing Oven (1)

Fig. 3.

Front Elevation

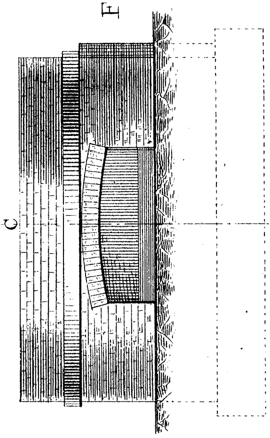

Fig. 5.

Section thro. E.F.

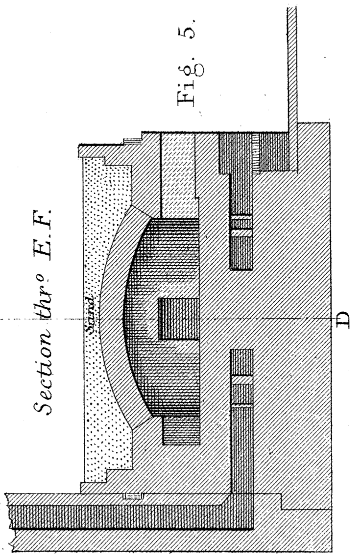

Fig. 2.

Side Elevation

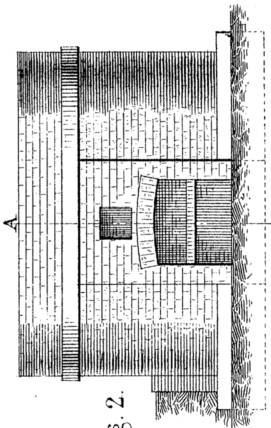

Fig. 4.

Section thro. G.H.

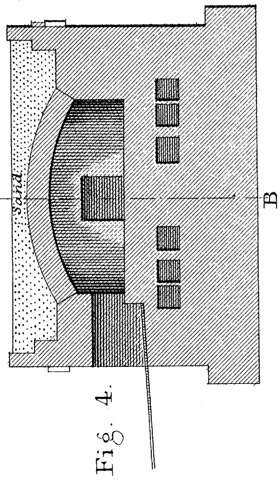

W.H. Wesley lith.

Annealing Oven (2)

Plan (Upper Chamber)
Fig. 6.

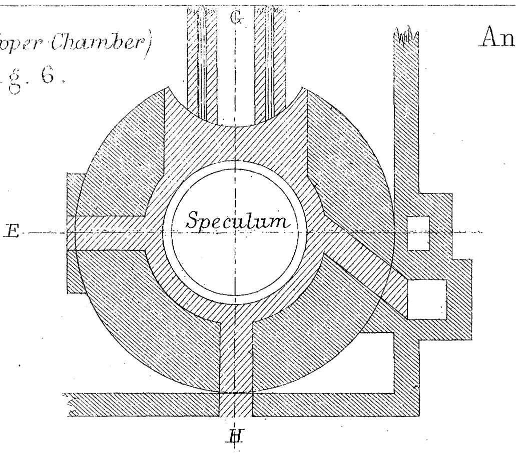

Plan – Flues
Fig. 7.

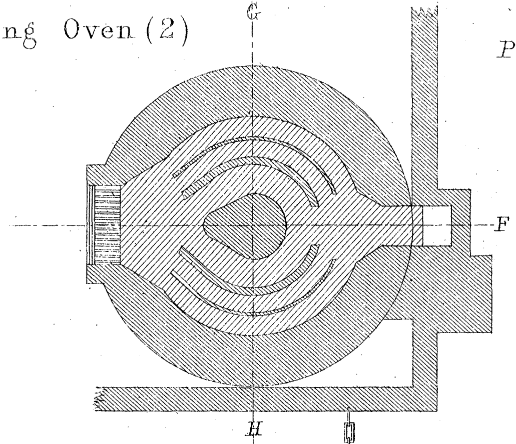

Fig. 8.

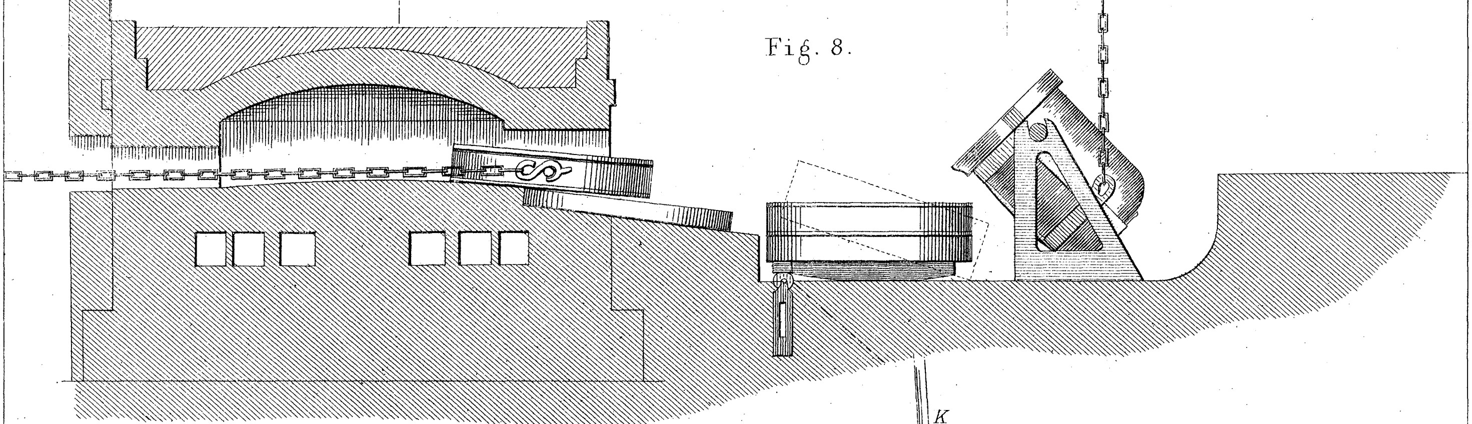

Fig. 9.

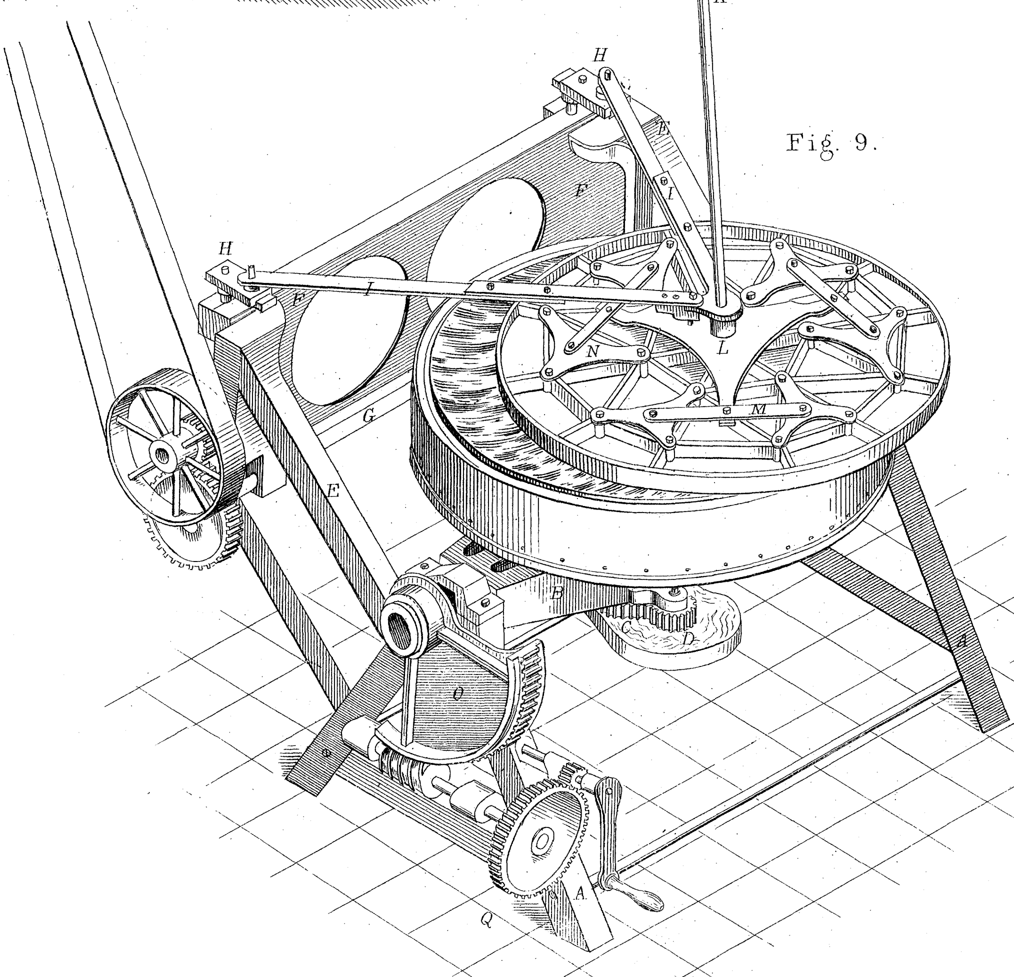

W. H. Wesley, lith.

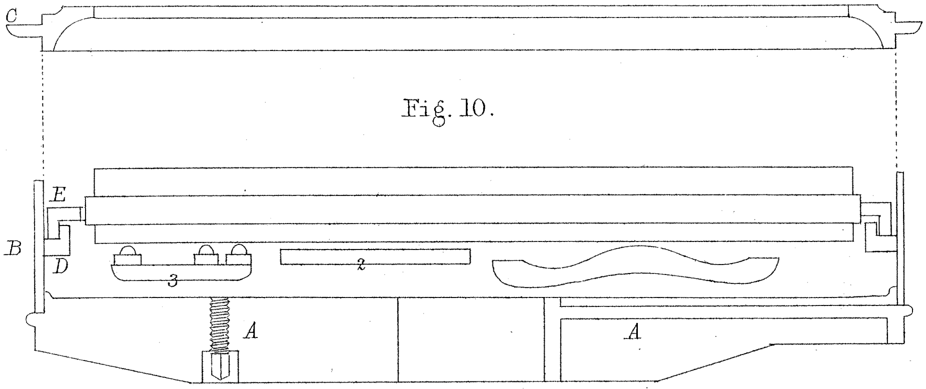
Fig. 10.

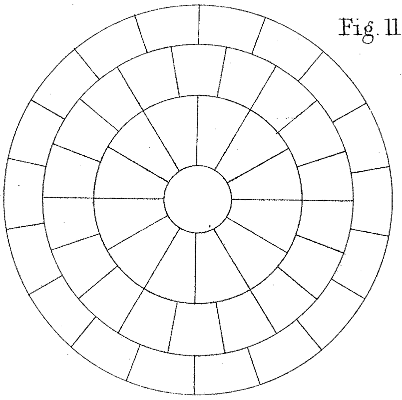
Fig. 11.

Fig. 12

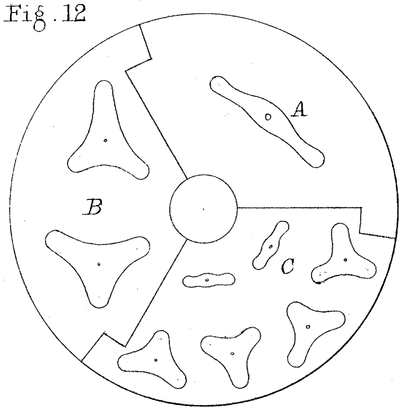

Fig. 13.

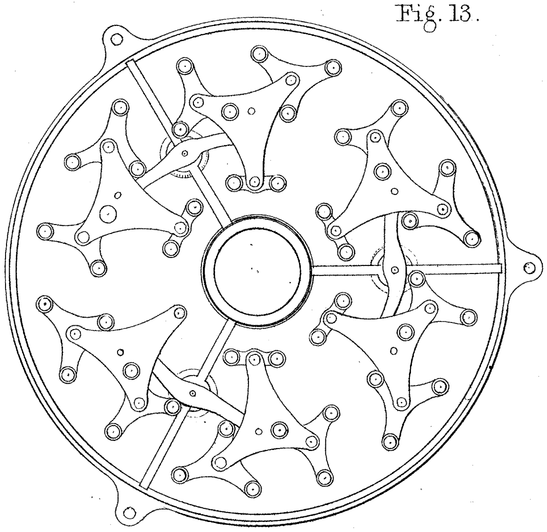

Fig. 14.

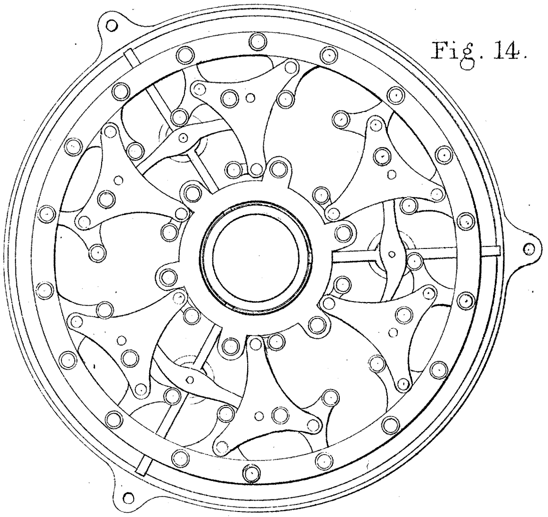

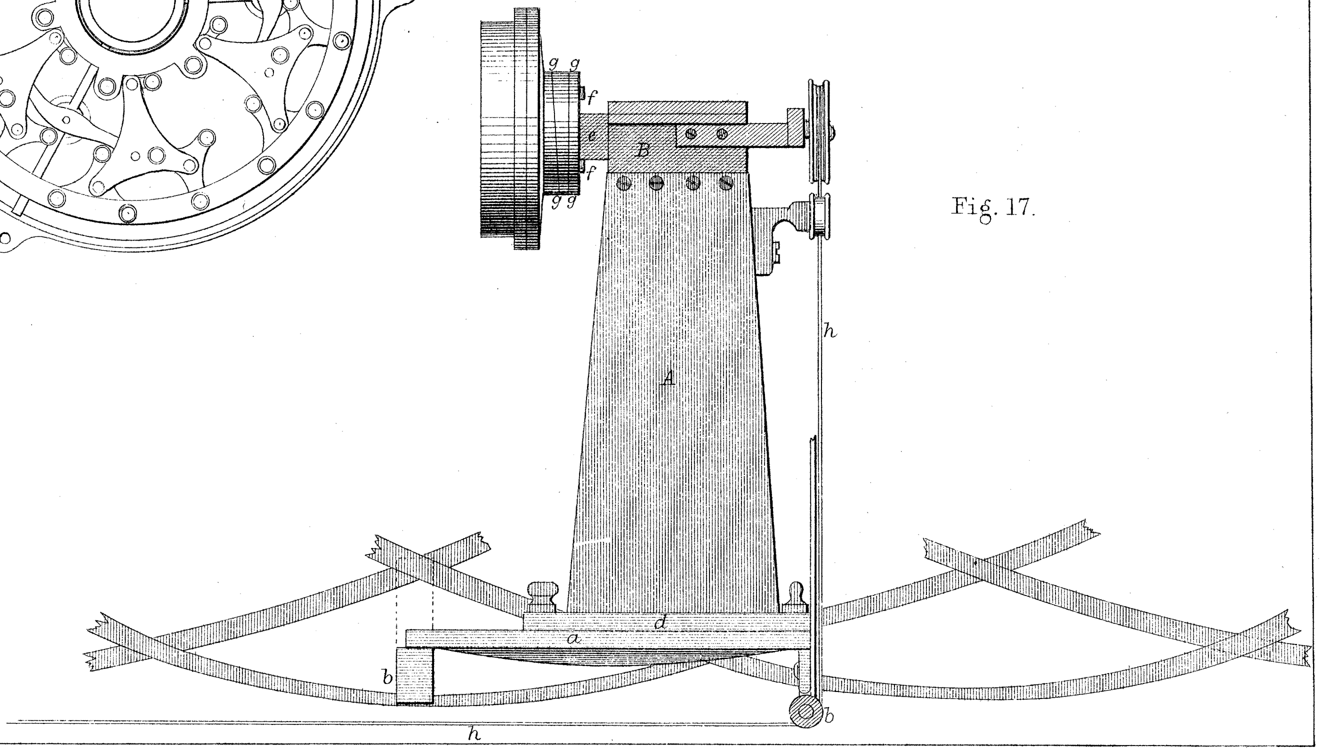
Fig. 17.

W. H. Wesley lith.

Fig. 16.

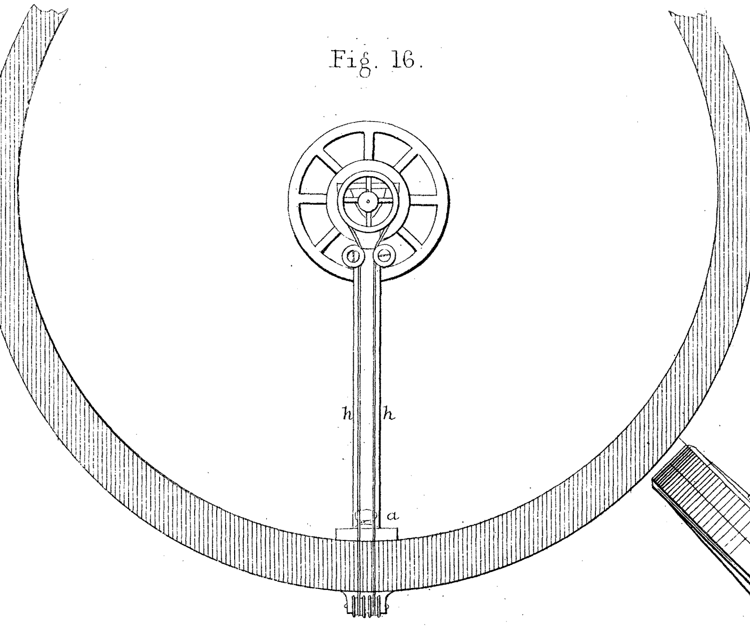

Fig. 19.

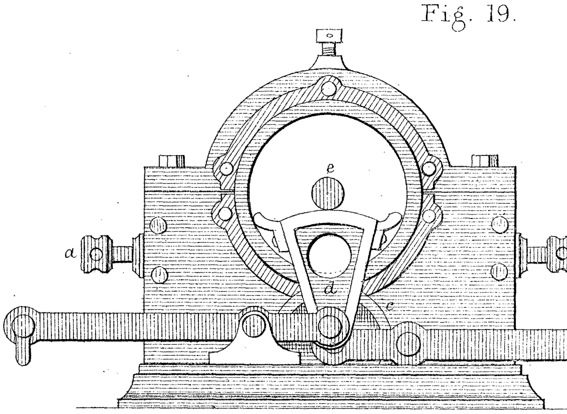

Fig. 21.

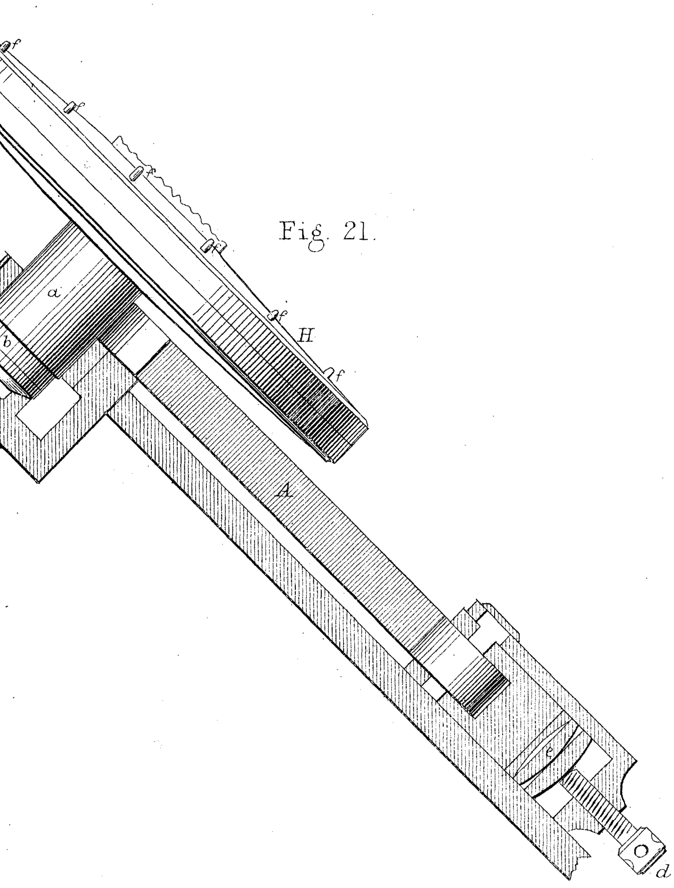

Fig. 18.

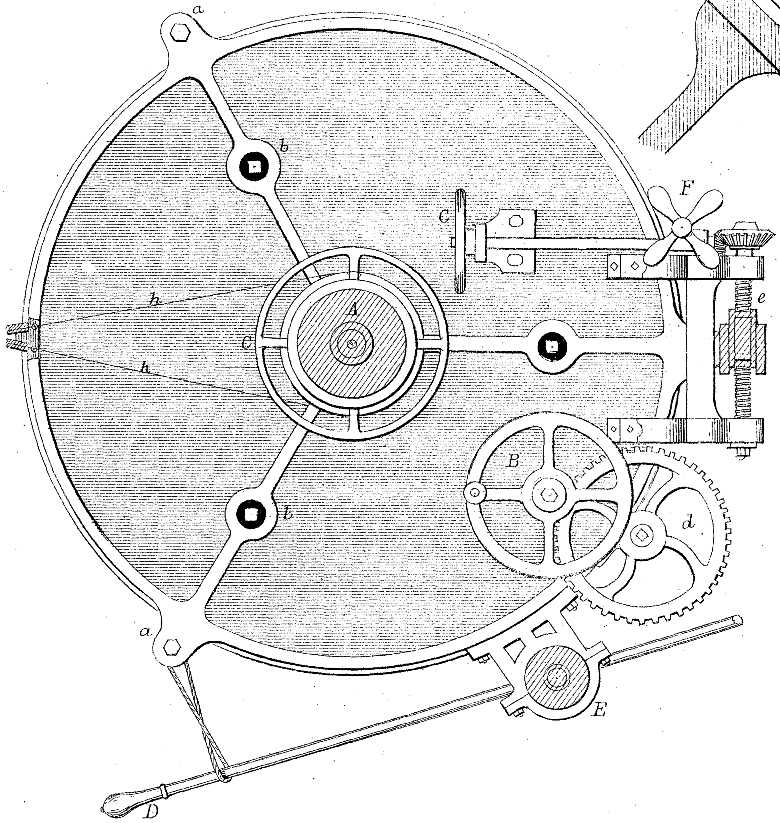

Fig. 20.

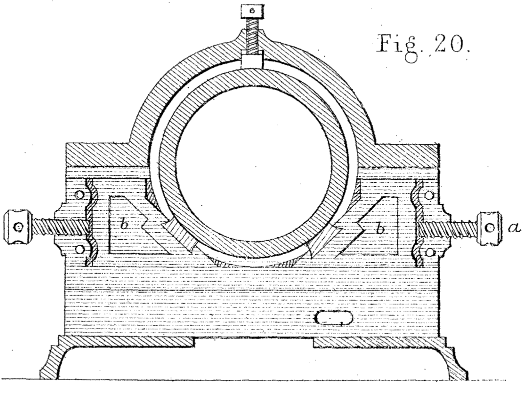

W. H. Wesley lith.

Fig. 22.

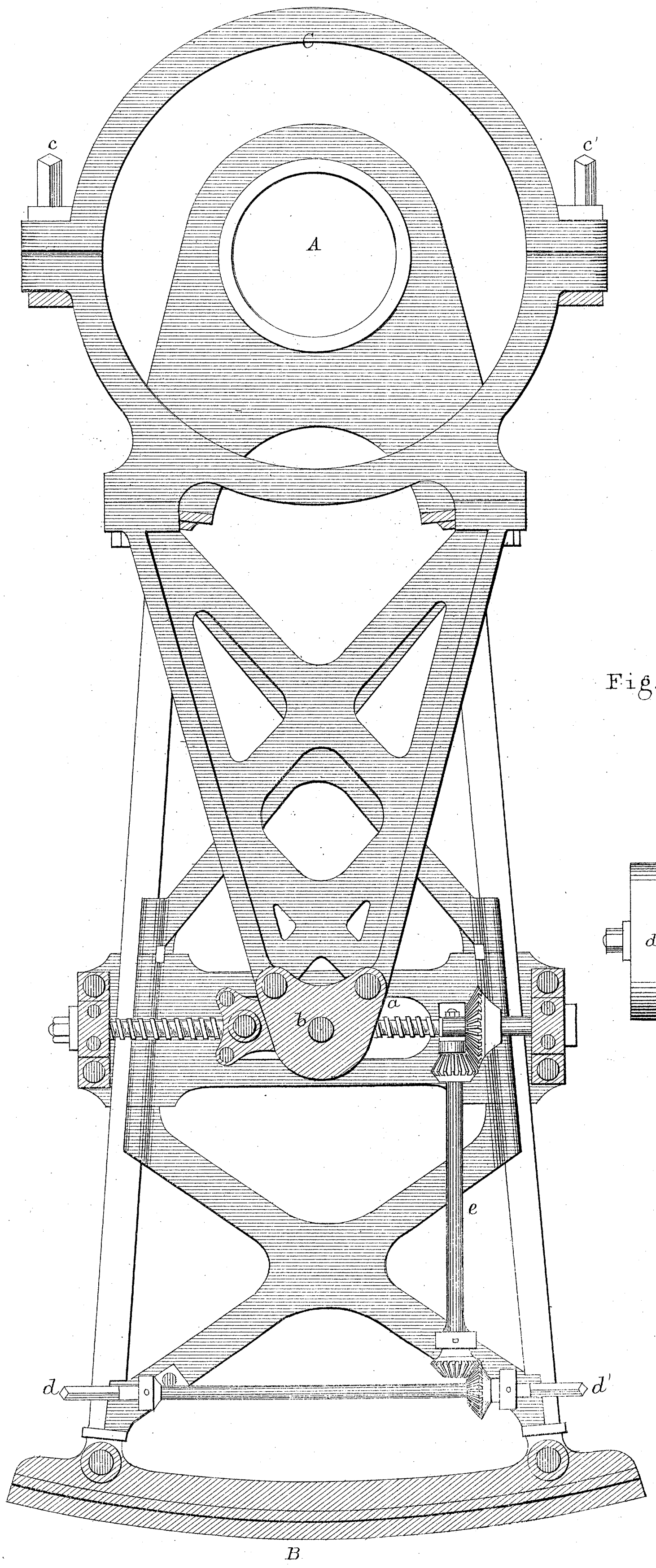

Fig. 23.

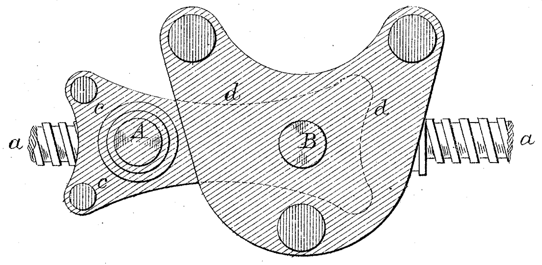

Fig. 24.

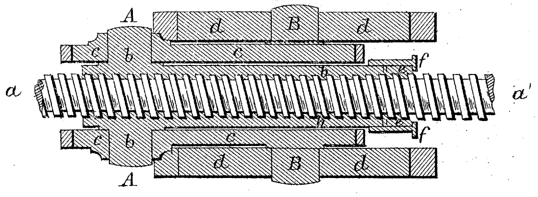

Fig. 27.

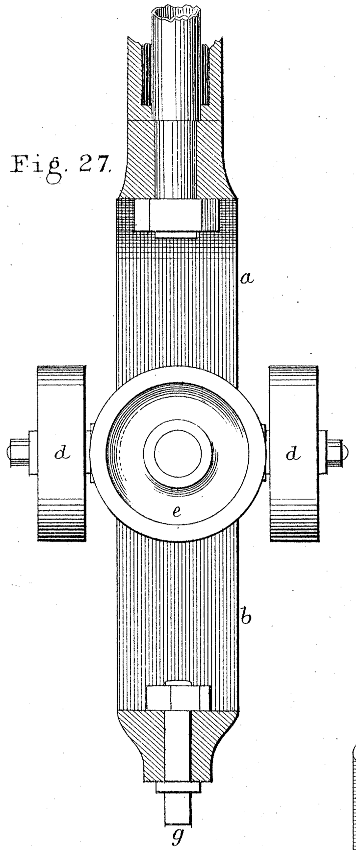

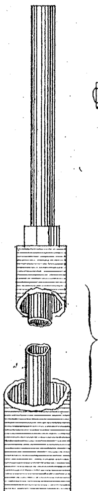

Fig. 28.

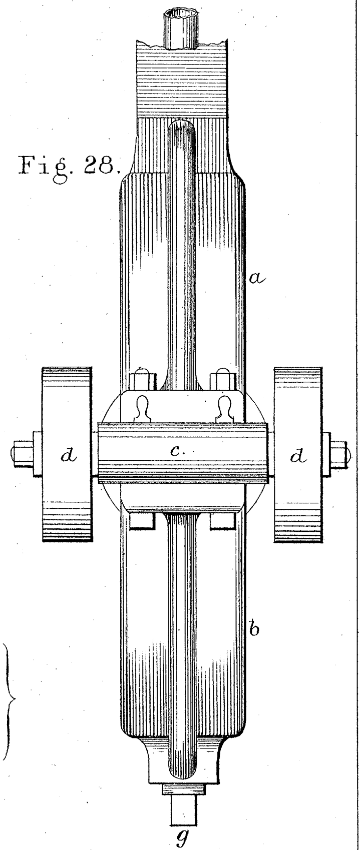

Fig. 25.

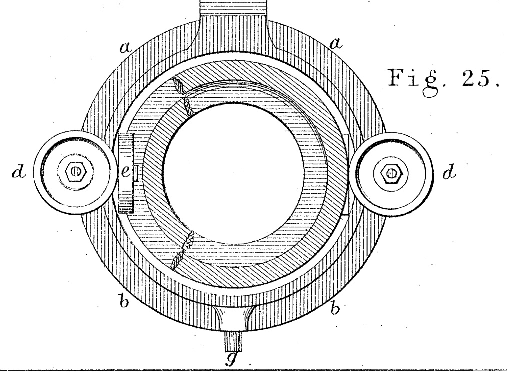

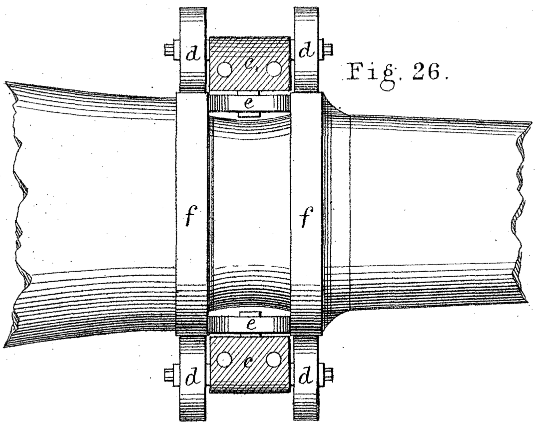
Fig. 26.

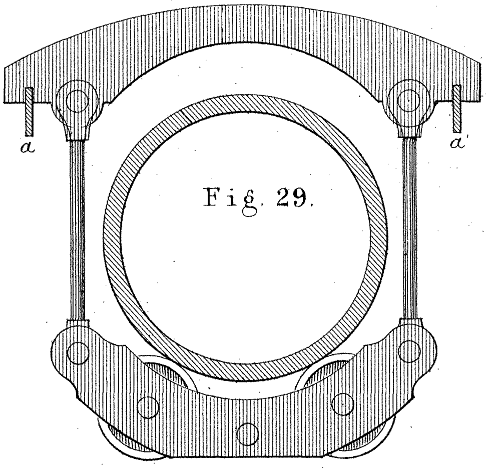

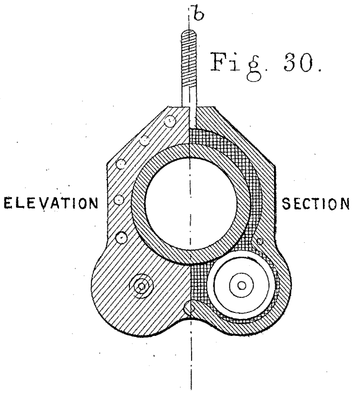

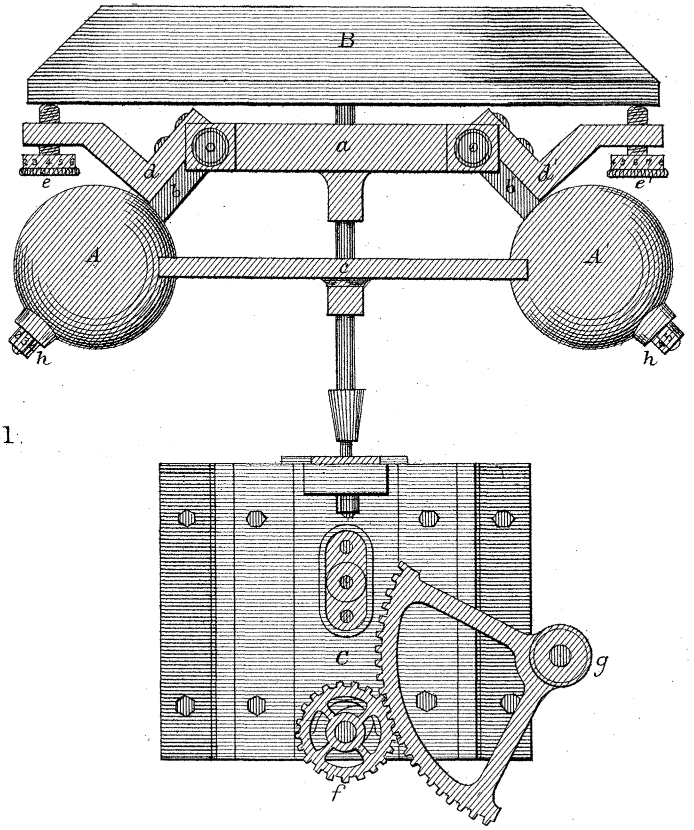

Fig. 31.

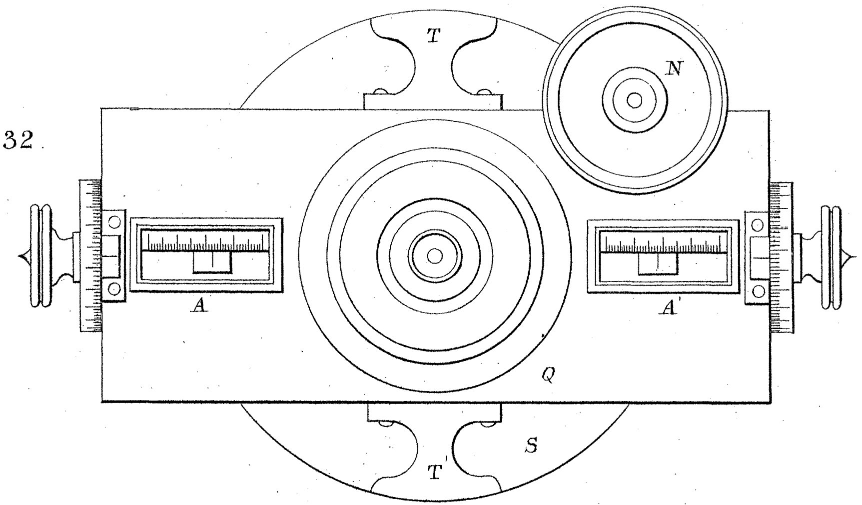
Fig. 32.

Fig. 33.

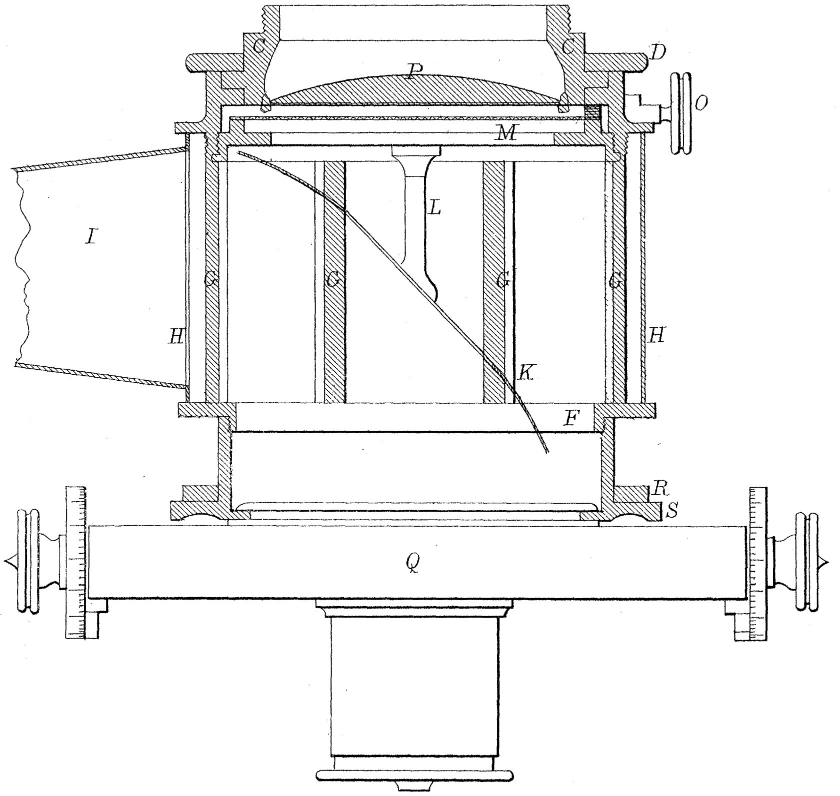

Fig. 34.

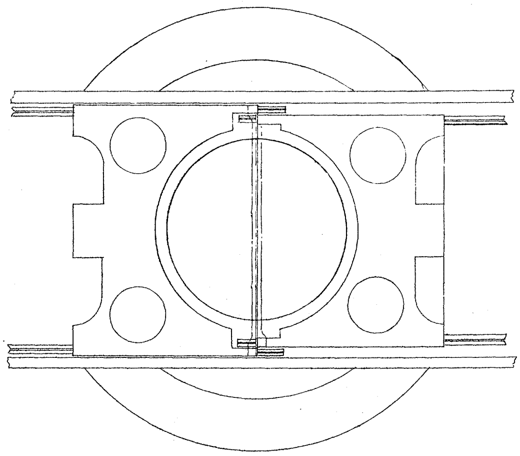

Fig. 35.

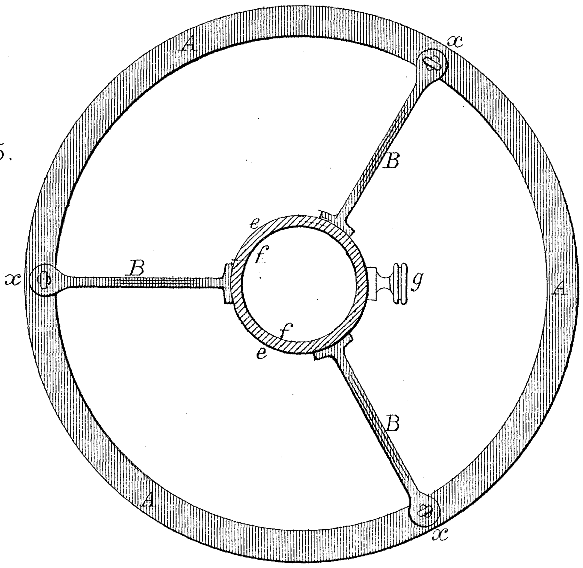

Fig. 36.

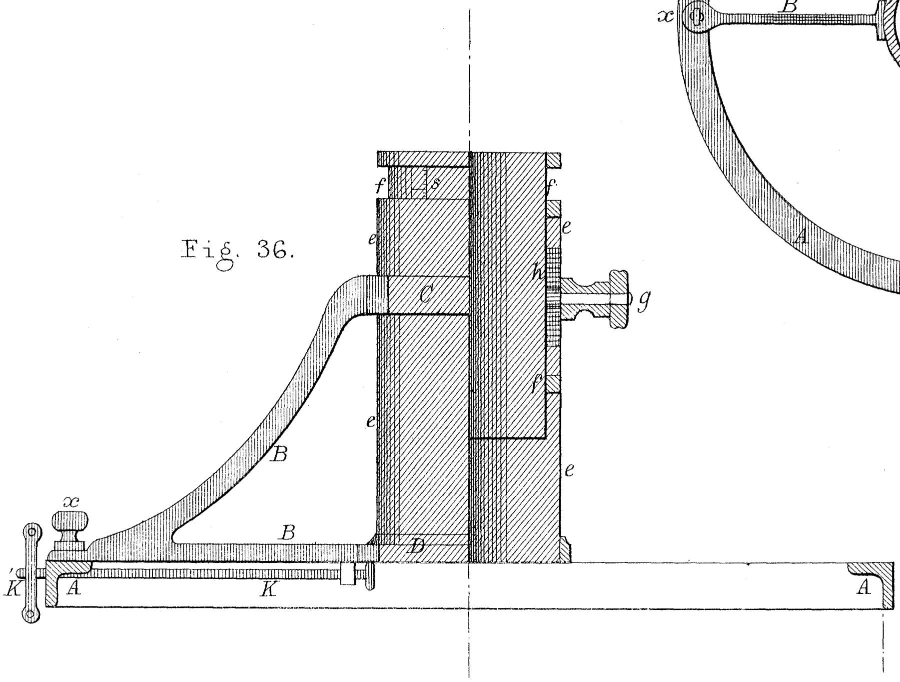

W.H.Wesley lith.

Fig. 37.

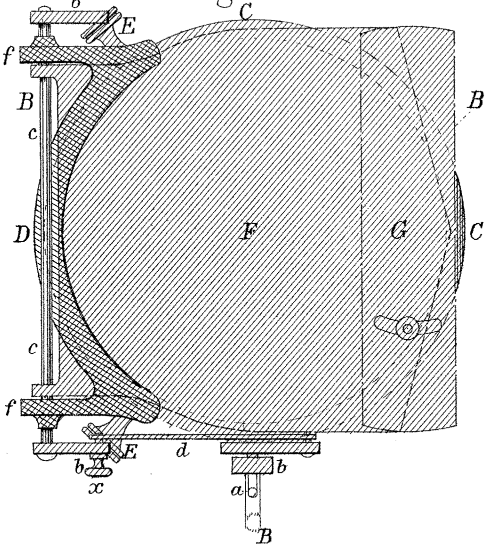

Fig. 38.

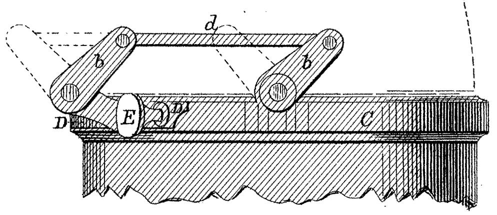

Fig. 39.

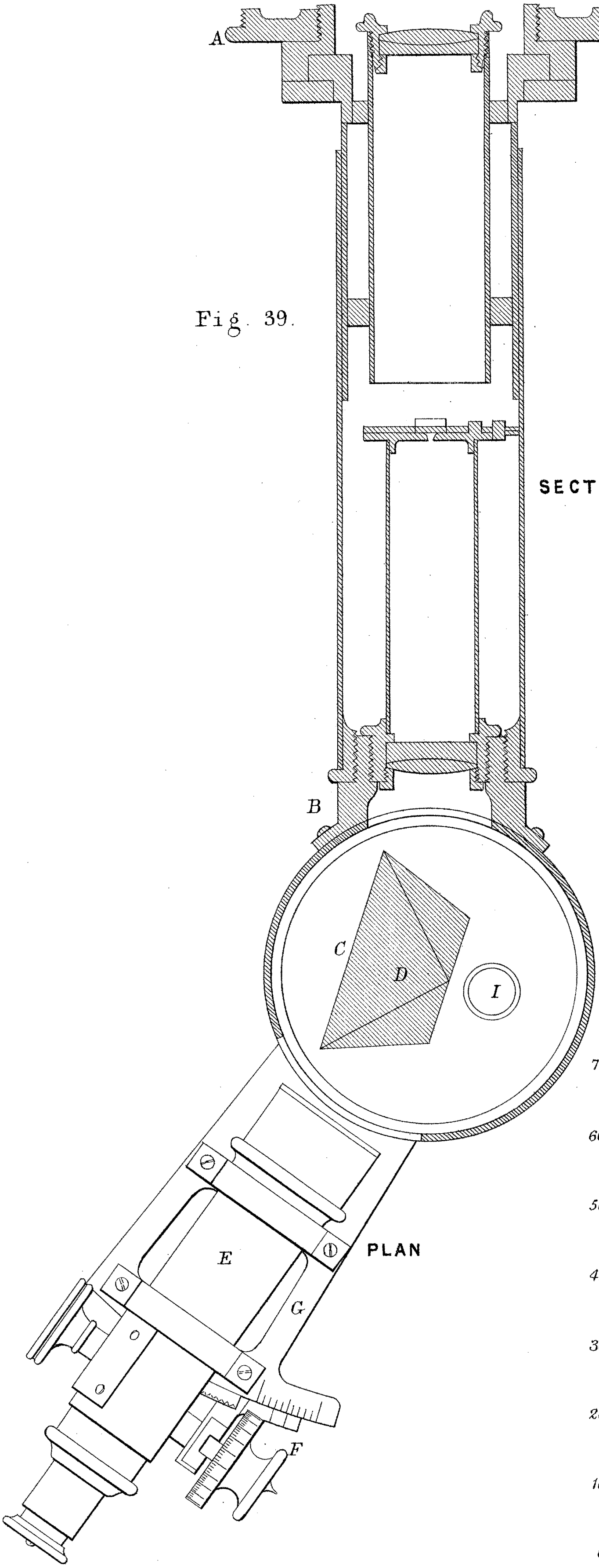

Fig. 42.

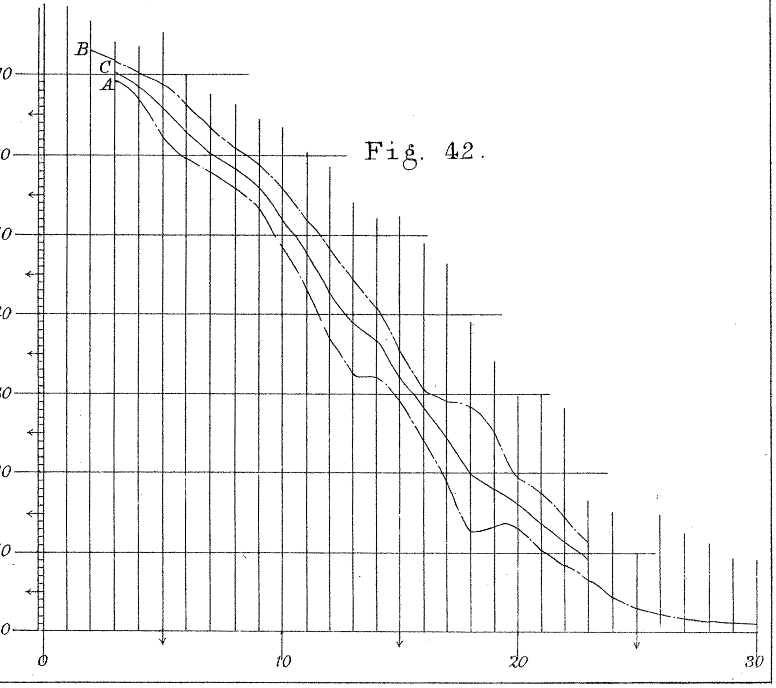

W.H.Wesley lith.

Fig. 40.

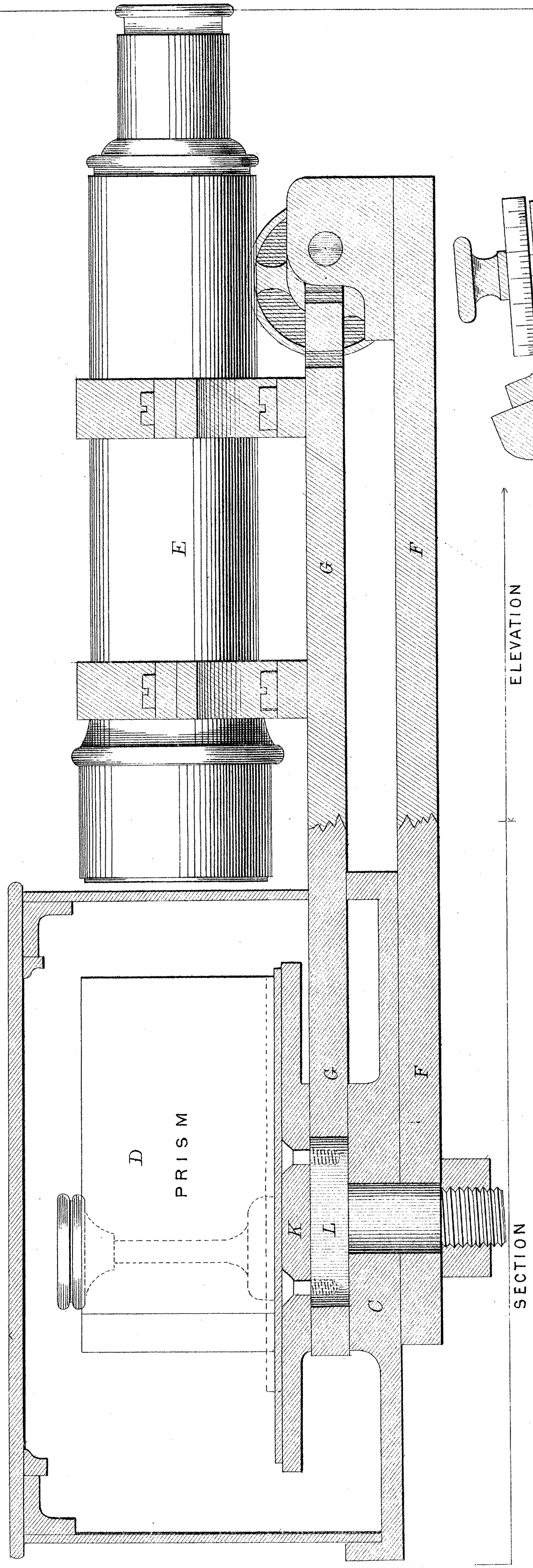

Fig. 41.

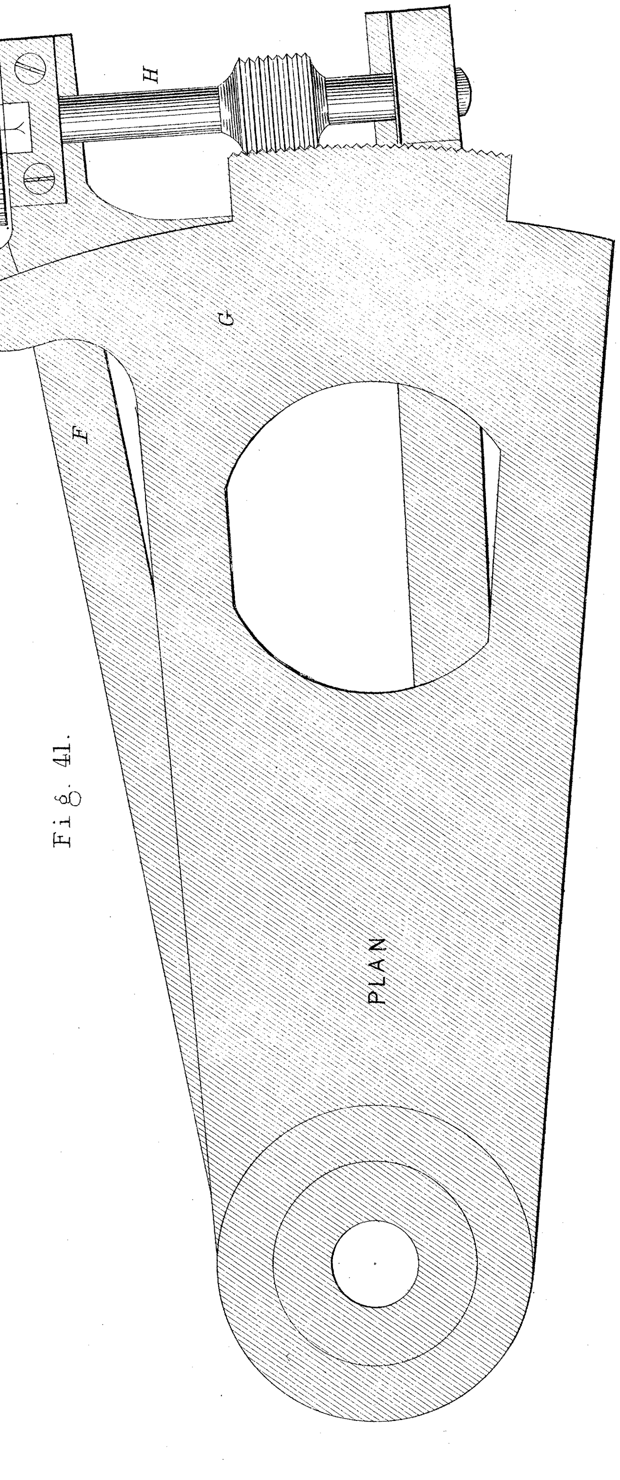

W.H. Wesley lith.

Fig. 15.

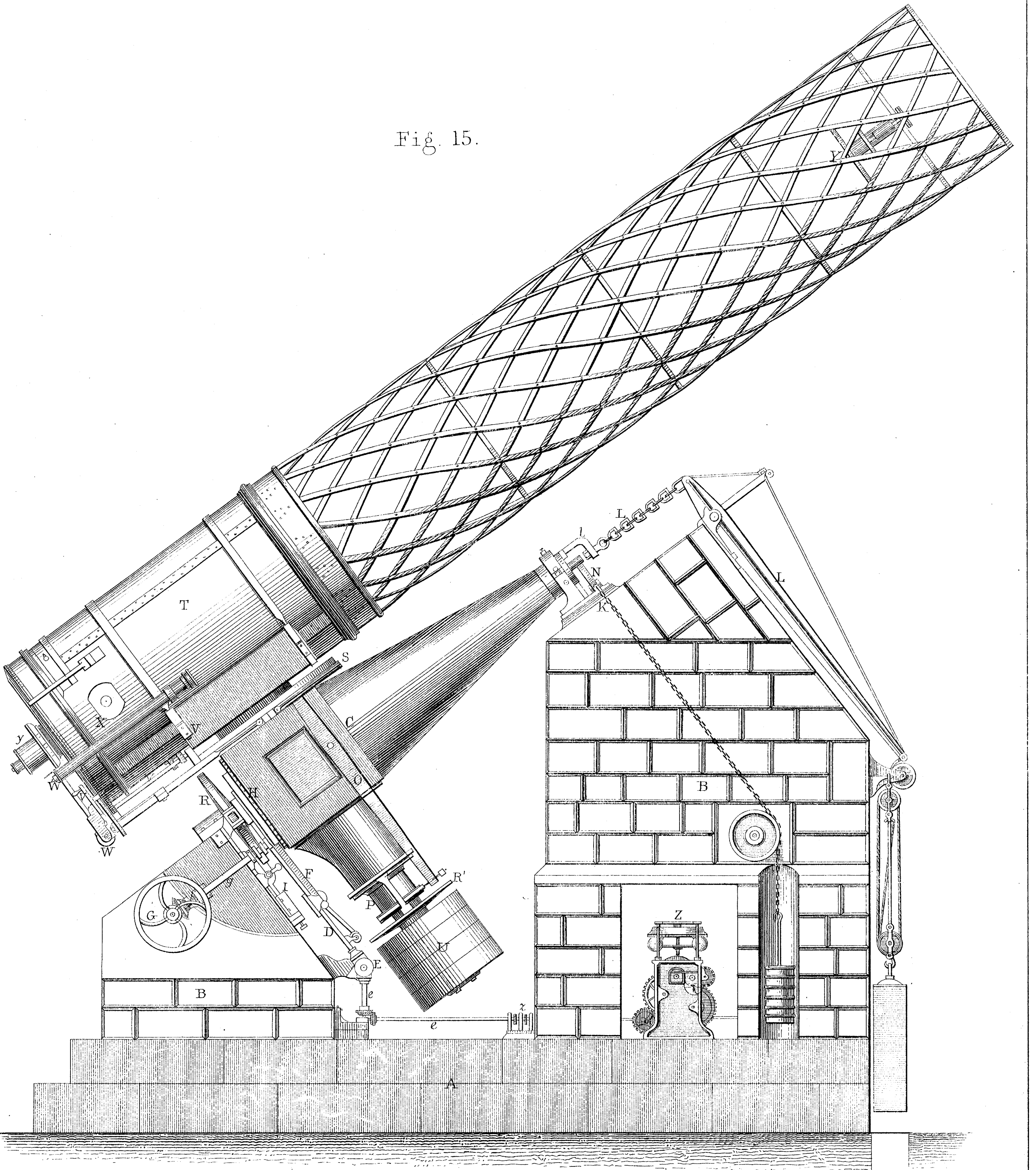

W. H. Wesley lith.